ST-S9

SERVICE MANUAL

Ver 1.0 2001.09

AEP Model
UK Model
E Model
Australian Model

ST-S9 is the tuner section in MHC-S9D.

SPECIFICATIONS

Tuner section

FM stereo, FM/AM superheterodyne tuner

FM tuner section

Tuning range	87.5 – 108.0 MHz
Antenna	FM lead antenna
Antenna terminals	75 ohm unbalanced
Intermediate frequency	10.7 MHz

AM tuner section

Tuning range	
Pan American model:	530 – 1,710 kHz (with the interval set at 10 kHz) 531 – 1,710 kHz (with the interval set at 9 kHz)
European and Middle Eastern models:	531 – 1,602 kHz (with the interval set at 9 kHz)
Other models:	531 – 1,602 kHz (with the interval set at 9 kHz) 530 – 1,710 kHz (with the interval set at 10 kHz)
Antenna	AM loop antenna
Antenna terminals	External antenna terminal
Intermediate frequency	450 kHz
Dimensions (w/h/d)	Approx. 280 x 108 x 340 mm
Mass	Approx. 2.1 kg

Design and specifications are subject to change without notice.

FM STEREO, FM/AM SUPERHETERODYNE TUNER

9-873-283-01 **Sony Corporation**
2001I0500-1 **Home Audio Company**
© 2001.9
Shinagawa Tec Service Manual Production Group

SONY®

TABLE OF CONTENTS

1. SERVICING NOTES 2

2. GENERAL
Location of Controls 3
Setting the Time 4

3. DISASSEMBLY
3-1. Disassembly Flow 5
3-2. Case 6
3-3. Front Panel Section 6
3-4. PANEL Board, SIRCS Board 7
3-5. Tuner Pack (FM/AM) 7
3-6. MAIN Board 8
3-7. DSP Board 8

4. TEST MODE 9

5. DIAGRAMS
5-1. Note for Printed Wiring Boards and Schematic Diagrams 10
5-2. Schematic Diagram – MAIN Board (1/2) – 12
5-3. Schematic Diagram – MAIN Board (2/2) – 13
5-4. Printed Wiring Board – MAIN Board – 14
5-5. Printed Wiring Board – DSP Board – 15
5-6. Schematic Diagram – DSP Board (1/2) – 16
5-7. Schematic Diagram – DSP Board (2/2) – 17
5-8. Printed Wiring Boards – PANEL Section – 18
5-9. Schematic Diagram – PANEL Section – 19
5-10. IC Pin Function Description 20

6. EXPLODED VIEWS
6-1. Case, Front Panel Section 26
6-2. Chassis Section 27

7. ELECTRICAL PARTS LIST 28

Notes on chip component replacement
- Never reuse a disconnected chip component.
- Notice that the minus side of a tantalum capacitor may be damaged by heat.

SAFETY-RELATED COMPONENT WARNING!!

COMPONENTS IDENTIFIED BY MARK ⚠ OR DOTTED LINE WITH MARK ⚠ ON THE SCHEMATIC DIAGRAMS AND IN THE PARTS LIST ARE CRITICAL TO SAFE OPERATION. REPLACE THESE COMPONENTS WITH SONY PARTS WHOSE PART NUMBERS APPEAR AS SHOWN IN THIS MANUAL OR IN SUPPLEMENTS PUBLISHED BY SONY.

SECTION 1
SERVICING NOTES

This set is a component of the MHC-S9D.
The MHC-S9D system configuration is as shown below, and therefore it does not operate normally unless all four components are connected.
In performing the repair, connect all components with the system cables.
Note: The precaution to the users is described on the label stuck on the back panel (DVD/video CD/CD player) and in the troubleshooting section in the Operation Manual.

System Configuration:

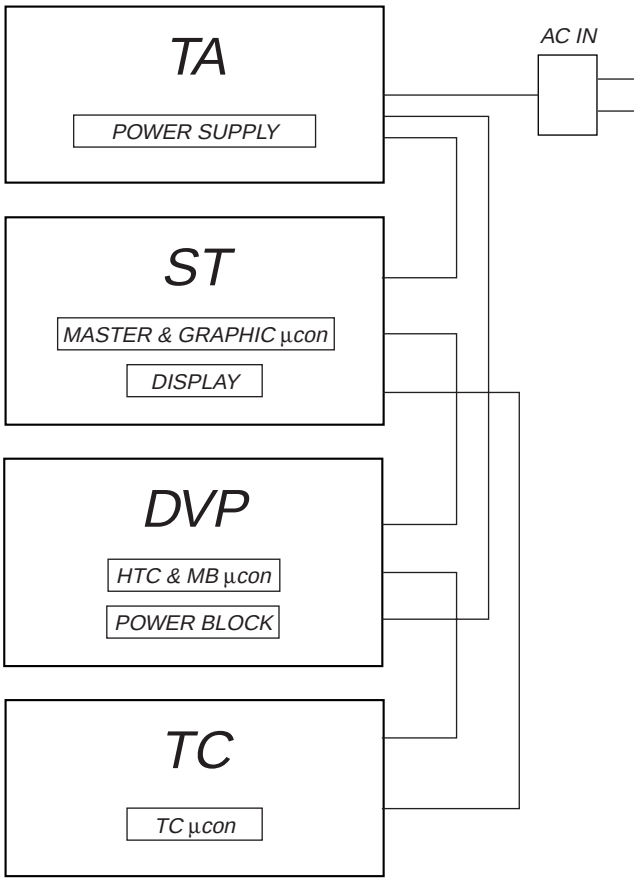

• MODEL IDENTIFICATION
– Rear Panel –

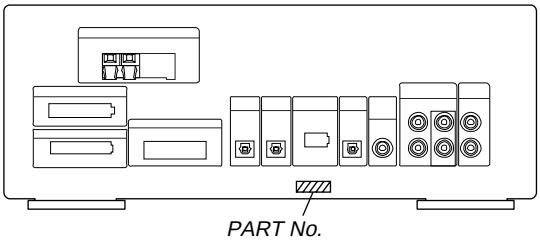

MODEL	PART No.
AEP and UK models	4-232-349-0□
Australian model	4-232-349-1□
Saudi Arabia model	4-232-349-2□
Singapore and E models	4-232-349-3□
Mexican model	4-232-349-4□
Thai model	4-232-349-5□
Korean model	4-232-349-6□

SECTION 2
GENERAL

This section is extracted from instruction manual.

LOCATION OF CONTROLS

– Front Panel –

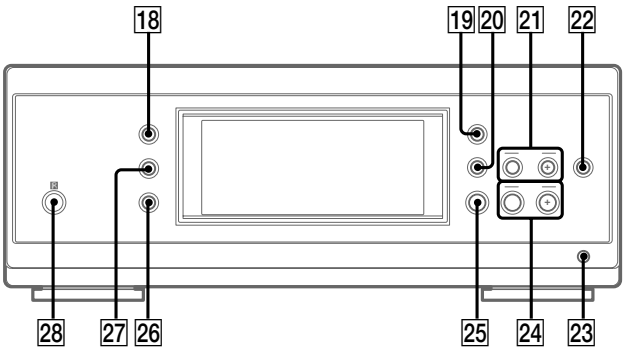

CLOCK/TIMER 27 (17, 47, 56)
DISPLAY 18 (17, 31, 32, 43, 54, 63)
ENTER 22 (42, 43)
IR receptor 28
PRESET /+ 24 (42, 43)
PTY (European model only) 23 (43)
STEREO/MONO 19 (43, 63)
TIMER SELECT 26 (47, 56)
TUNER/BAND 25 (42)
TUNER MEMORY 20 (42)
TUNING /+ 21 (42)

– Rear Panel –

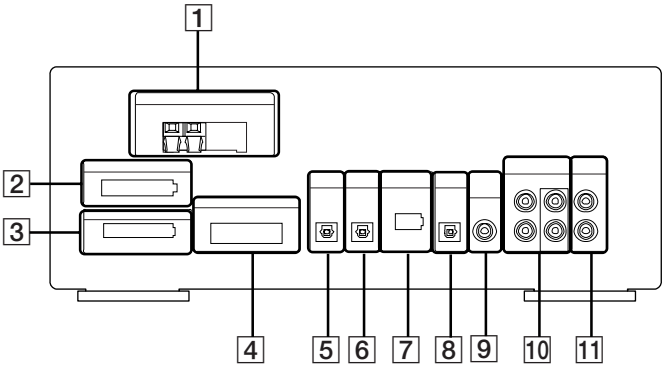

1 ANTENNA terminal
2 SYSTEM CONTROL 1 connector (TO TA-S9D)
3 SYSTEM CONTROL 2 connector (TO TA-S9D)
4 SYSTEM CONTROL 3 connector (FROM DVP-S9)
5 OPTICAL IN terminal
6 OPTICAL IN terminal (FROM DVP-S9)
7 SYSTEM CONTROL 4 connector (TO TC-S9)
8 OPTICAL OUT terminal
9 SUB WOOFER OUT jack
10 MD IN/OUT jack
11 VIDEO (AUDIO) IN jack

Remote control

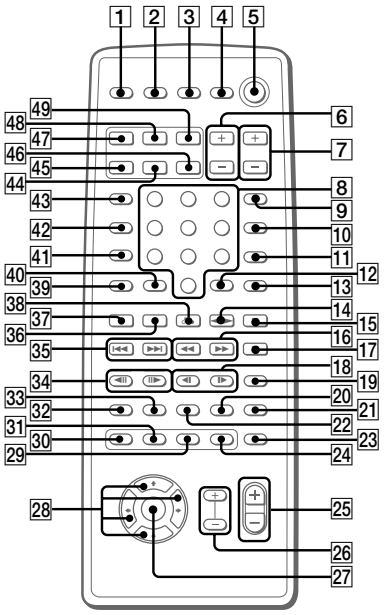

ANGLE 32 (37)
AUDIO 22 (34)
CLEAR 12 (22, 29, 30, 36)
CLOCK/TIMER SELECT 3 (47, 56)
CLOCK/TIMER SET 2 (17, 47, 56)
DBFB 41 (48)
D.SKIP 9 (26)
DIGITAL 44 (57)
DISPLAY 47 (17, 31, 32, 43, 54)
DVD DISPLAY 23 (18, 19, 30, 32 34, 36 40)
DVD MENU 21 (27)
DVD SET UP 19 (18, 19, 24, 39)
ENTER 27
EQ 31 (52)
EQ ON/OFF 29 (53)
FILE SELECT +/ 26 (48, 49, 53)
FUNCTION 43 (18, 25, 27, 28, 36, 45, 46, 55, 57)
GROOVE 42 (48)
KARAOKE PON (Except for North American and European models) 39 (54)
MD 46 (57)
Numeric buttons 8 (28, 30)
PLAY MODE 11 (25, 28, 29, 46)
REPEAT 10 (30)
RETURN ↶ 13 (27, 39, 40)
SELECT DVD ► 36 (20, 25, 27, 29, 30)
SET UP 24 (14, 16, 51, 53, 54)
SLEEP 1 (55)
SLOW ◄II/II► 18 (26)
SPECTRUM ANALYZER 48 (54)
STEP ◄II/II► 34 (26)
SUBTITLE 33 (37)
SUR 30 (51)
TAPE A ◄► 38 (44)
TAPE B ◄► 14 (44, 45)
TITLE 20 (27)
TUNER/BAND 37 (42)
TV I/⏻ 4 (13)
TV CH +/ 7 (13)
TV/VIDEO 49 (13)
TV VOL +/ 6 (13)
VIDEO 45 (57)
VOL +/ 25

BUTTON DESCRIPTIONS

I/⏻ (power) 5
II (pause) 17
■ (stop) 15
◄◄/►► (rewind/fast forward), TUNING /+ 16
I◄◄/►►I (go back/go forward), PRESET /+, PREV/NEXT 35
↑/↓/←/→ 28
>10 40

Setting the time

1 **Turn on the system.**

2 **Press CLOCK/TIMER (or CLOCK/TIMER SET on the remote).**
When you set the time for the first time, proceed to step 5.

3 **Press ↑ or ↓ repeatedly to select "CLOCK SET".**

4 **Press ENTER (A/V amplifier or remote).**

5 **Press ↑ or ↓ repeatedly to set the hour.**

6 **Press ENTER (A/V amplifier or remote).**

7 **Press ↑ or ↓ repeatedly to set the minutes.**

8 **Press ENTER (A/V amplifier or remote).**

Tip
If you have made a mistake or want to change the time, start over from step 2.

Note
The clock settings are canceled when you disconnect the power cord or if a power failure occurs.

SECTION 3
DISASSEMBLY

• This set can be disassembled in the order shown below.

3-1. DISASSEMBLY FLOW

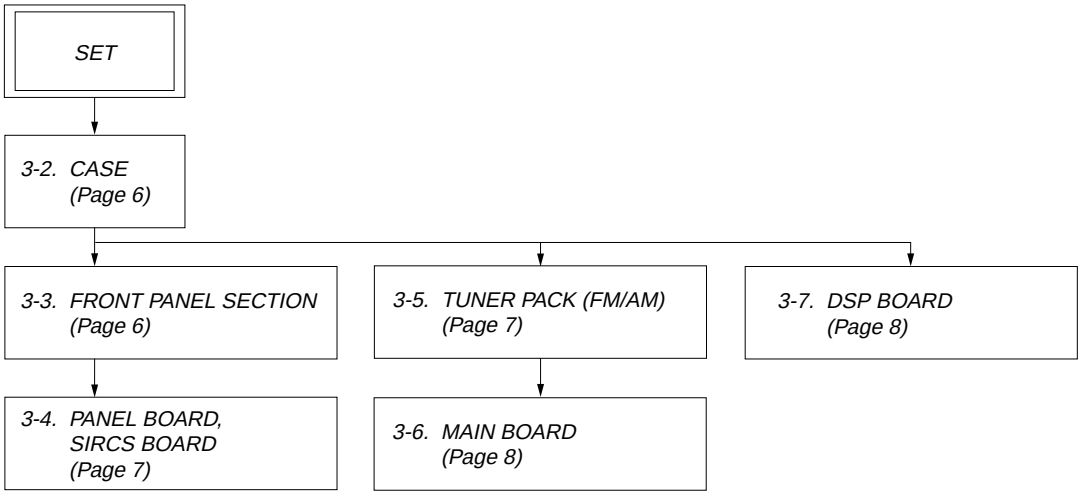

Note: Follow the disassembly procedure in the numerical order given.

3-2. CASE

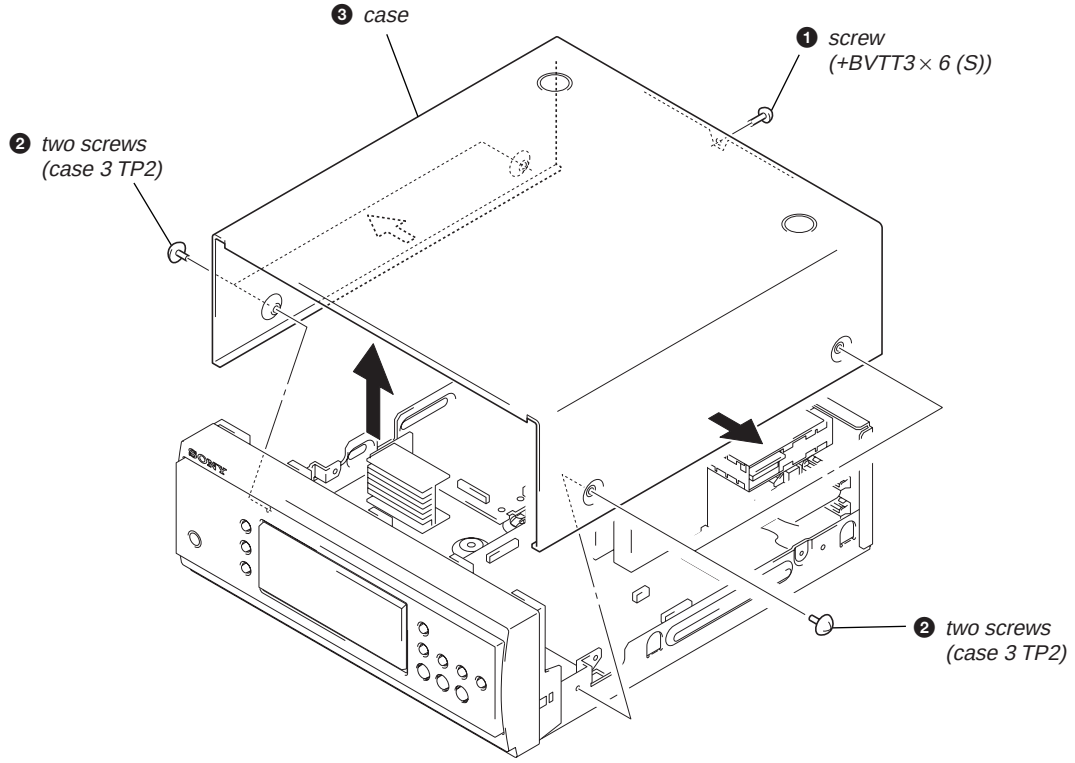

3-3. FRONT PANEL SECTION

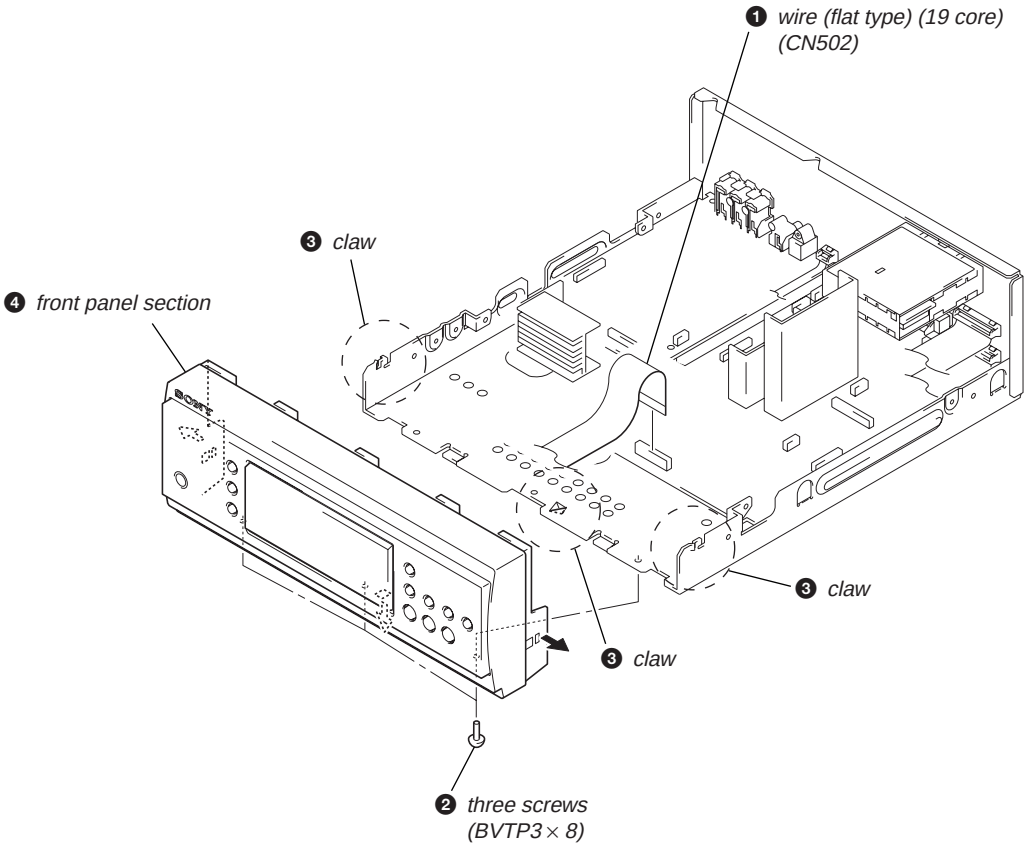

3-4. PANEL BOARD, SIRCS BOARD

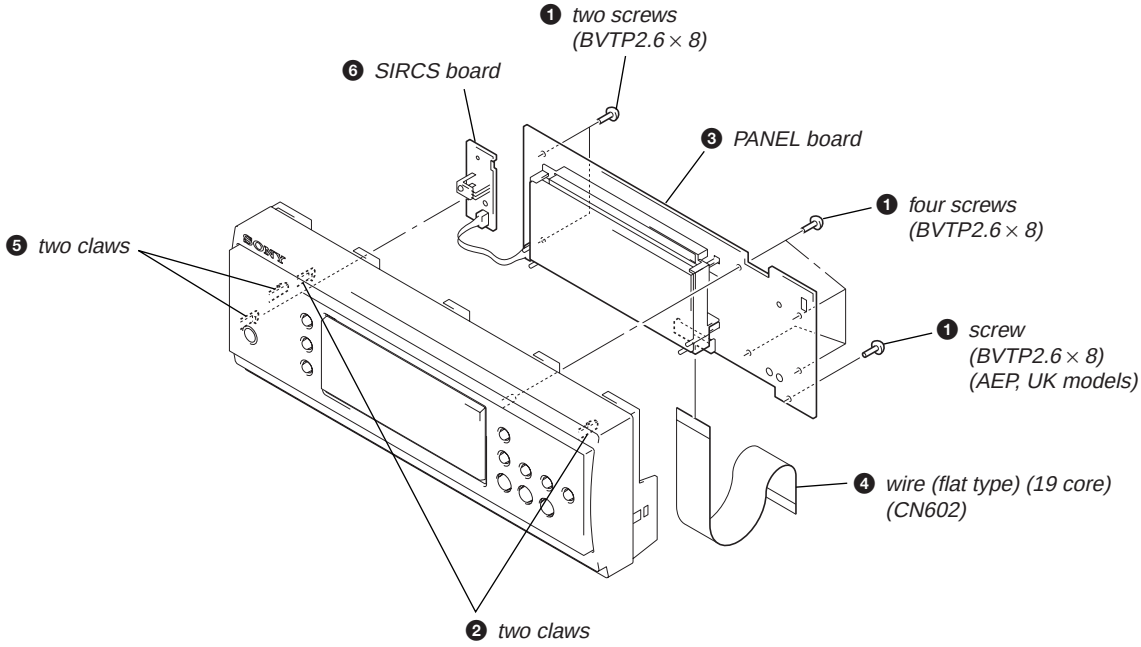

3-5. TUNER PACK (FM/AM)

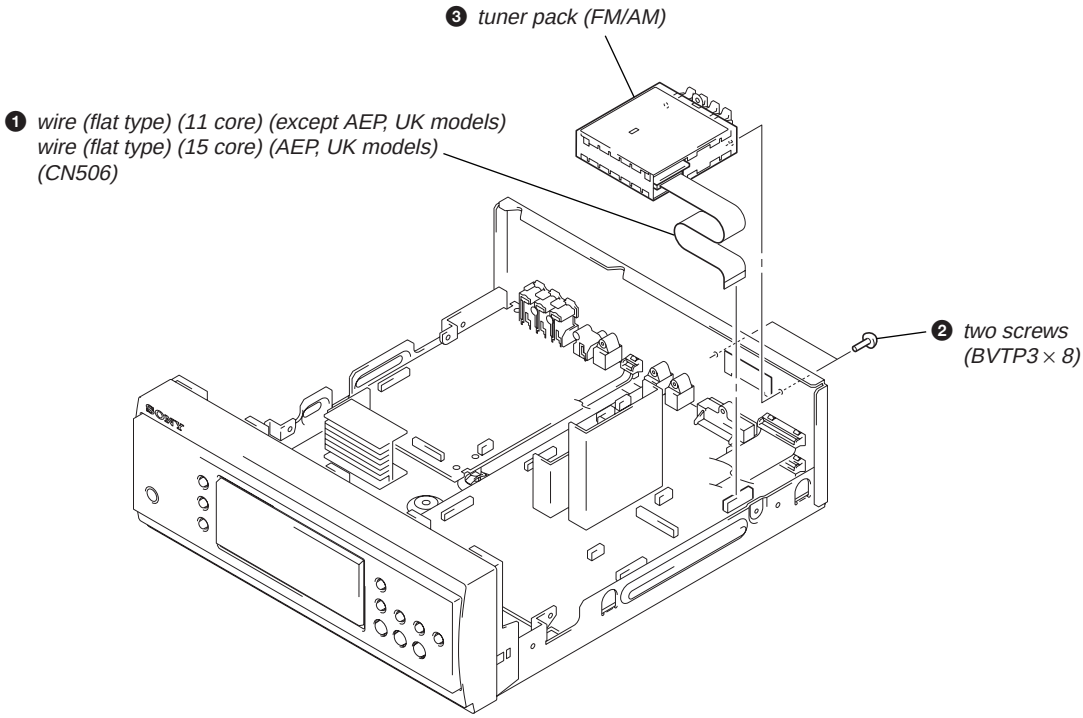

3-6. MAIN BOARD

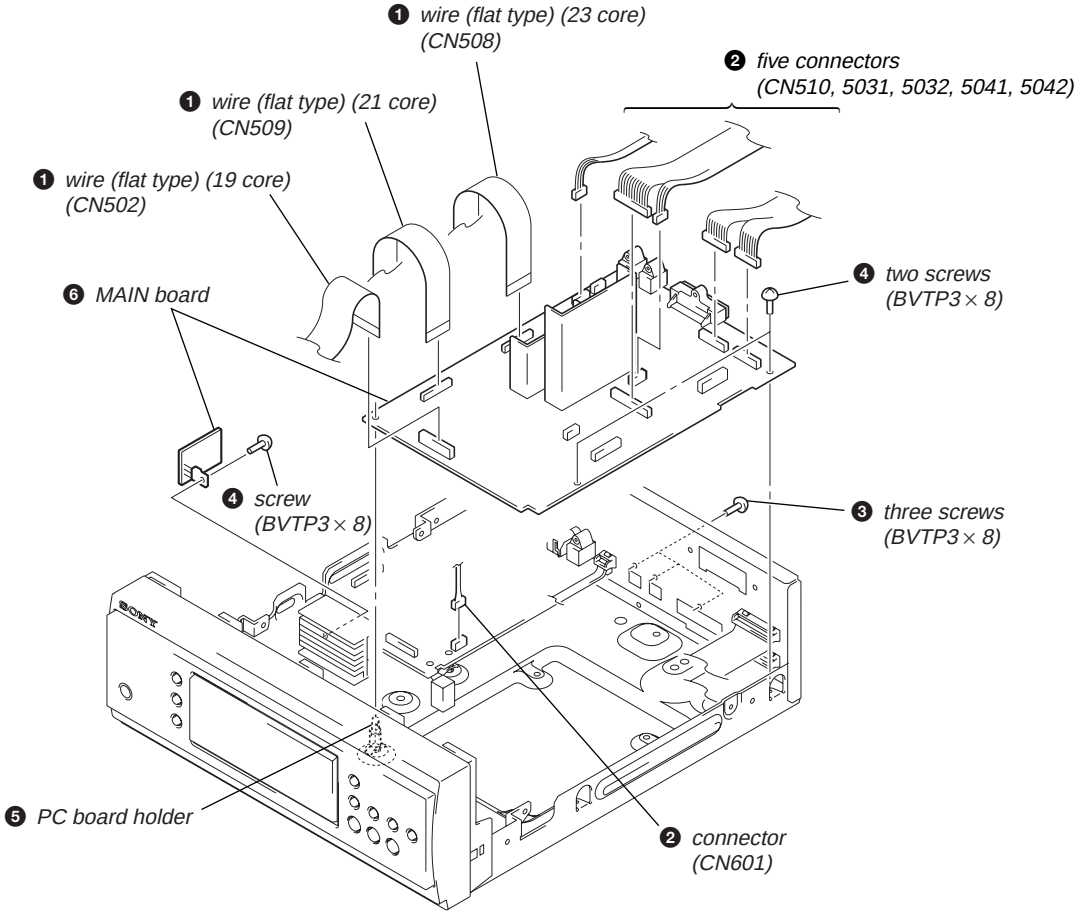

3-7. DSP BOARD

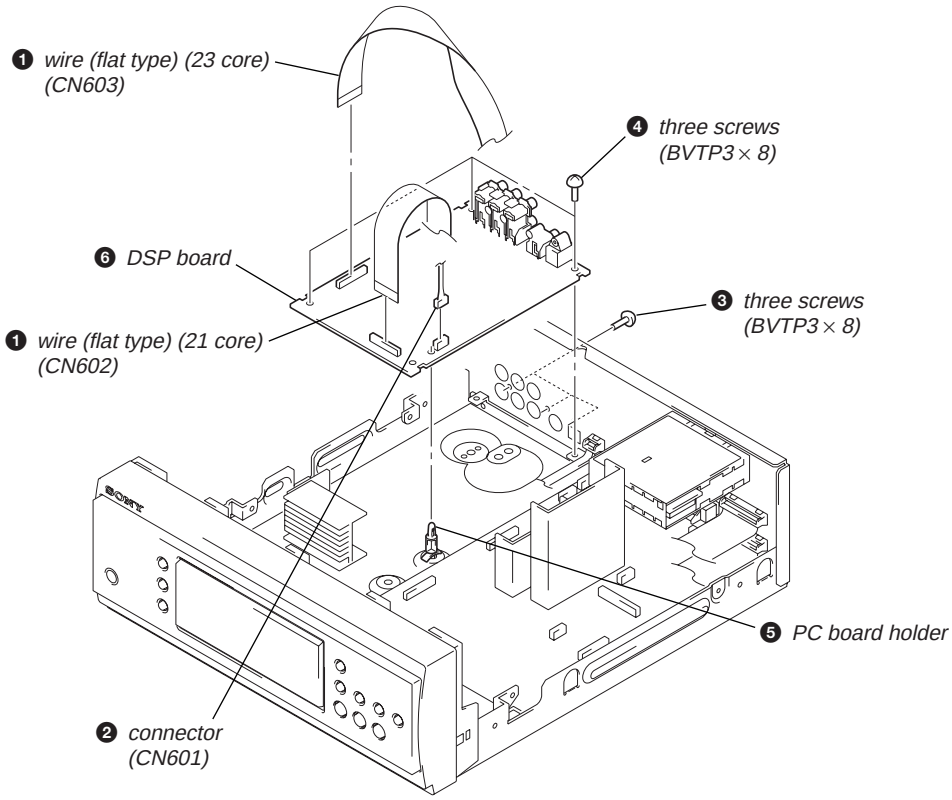

SECTION 4
TEST MODE

Note: Use following buttons in the test mode.
no mark : Button of tuner unit (ST-S9)
*1 : Button of amplifier unit (TA-S9D)
*2 : Button of DVD/video CD/CD unit (DVP-S9)

[MC Cold Reset]

- The cold reset clears all data including preset data stored in the RAM to initial conditions. Execute this mode when returning the set to the customer.

Procedure 1:

1. Press the I/⏻ *1 button to turn the power ON.
2. While pressing the DIGITAL *1 button, press the DISPLAY button.
3. The set is reset, and becomes standby state.

Procedure 2:

1. Press the I/⏻ *1 button to turn the power ON.
2. While pressing the both PLAY MODE *2 and ■ *2 buttons, press the ▶▶ *2 button.
3. The set is reset, and becomes standby state.

[MC Hot Reset]

- This mode resets the set with the preset data kept stored in the memory. The hot reset mode functions same as if the power cord is plugged in and out.

Procedure:

1. Press the I/⏻ *1 button to turn the power ON.
2. While pressing the both STEREO/MONO and CINEMA STUDIO C *1 buttons, press the TIMER SELECT button.
3. The set is reset, and becomes standby state.

[Change-over the AM Tuning Interval] (EXCEPT AEP, UK and Sauidi Arabia models)

- The AM tuning interval can be changed over 9 kHz or 10 kHz.

Procedure:

1. Press the I/⏻ *1 button to turn the power ON.
2. Turn the FUNCTION *1 knob to select "TUNER", and press the TUNER/BAND button to select the BAND "AM".
3. Press the I/⏻ *1 button to turn the power OFF.
4. While pressing the ENTER button, press the I/⏻ *1 button, and the display on the fluorescent indicator tube changes to "AM 9 K STEP" or "AM 10 K STEP", and thus the tuning interval is changed over.

[Change-over of VACS ON/OFF]

1. Press the I/⏻ *1 button to turn the power ON.
2. While pressing the both STEREO/MONO and CINEMA STUDIO C *1 buttons, press the CINEMA STUDIO B button, and VACS ON/OFF is change over.

[GC Test Mode]
Enter the GC Test Mode

Procedure 1:

1. Press the I/⏻ *1 button to turn the power ON.
2. While pressing the both STEREO/MONO and CINEMA STUDIO C *1 buttons, press the CLOCK/TIMER button.
3. LEDs and fluorescent indicator tube are all turned on of all units.

Procedure 2:

1. Press the I/⏻ *1 button to turn the power ON.
2. While pressing the both PLAY MODE *2 and ■ *2 buttons, press the ⏏ (DISC 1)*2 button.
3. LEDs and fluorescent indicator tube are all turned on of all units.

Version Display Mode

Procedure:

1. Enter the GC test mode.
2. Each time the TUNER MEMORY or DISC 1 *2 button is pressed, microcomputer or mechanism deck version is displayed of each unit.
3. Press the TUNING + or DISC 3 *2 button to detail is displayed the version.

Key Check Mode

Procedure:

1. Enter the GC test mode.
2. Press the TUNING – or DISC 2 *2 button to set the key check mode.
3. In the key check the mode, the fluorescent indicator tube displays "K 0 J 0 V 0" . Each time a button is pressed, "K" value increases. However, once a button is pressed, it is no longer taken into account.

VACS Level Display Mode

Procedure:

1. Enter the GC test mode.
2. Press the TUNING + or DISC 3 *2 button to display VACS level on the fluorescent indicator tube.

Segment Check Mode

Procedure:

1. Enter the GC test mode.
2. Press the ENTER or ■ *2 button to set the segment check mode.
3. In the segment check the mode. Each ENTER or ■ *2 button is pressed, the fluorescent indicator tube displays is switching variously.

Releasing the GC Test Mode

- To release from this mode, press three buttons in the same manner as entering this mode or disconnect the power cord.

SECTION 5
DIAGRAMS

5-1. NOTE FOR PRINTED WIRING BOARDS AND SCHEMATIC DIAGRAMS

Note on Printed Wiring Board:
- ○—— : parts extracted from the component side.
- —— : parts extracted from the conductor side.
- ▒ : Pattern from the side which enables seeing.

(The other layers' patterns are not indicated.)

Caution:	
Pattern face side: (Conductor Side)	Parts on the pattern face side seen from the pattern face are indicated.
Parts face side: (Component Side)	Parts on the parts face side seen from the parts face are indicated.

- Indication of transistor.

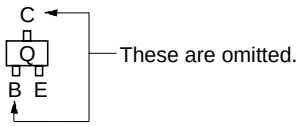

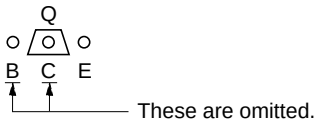

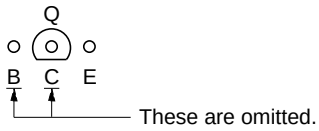

Note on Schematic Diagram:
- All capacitors are in µF unless otherwise noted. pF: µµF 50 WV or less are not indicated except for electrolytics and tantalums.
- All resistors are in Ω and 1/4 W or less unless otherwise specified.
- △ : internal component.
- : fusible resistor.
- : panel designation.

Note: The components identified by mark ⚠ or dotted line with mark ⚠ are critical for safety.
Replace only with part number specified.

- ▬▬ : B+ Line.
- ▬ ▬ ▬ : B– Line.
- Voltages and waveforms are dc with respect to ground under no-signal (detuned) conditions.
  no mark : TUNER (FM/AM)
  ( ) : DVD/CD PLAY
  ⟨⟨ ⟩⟩ : AC OFF
  ∗ : Impossible to measure
- Voltages are taken with a VOM (Input impedance 10 MΩ). Voltage variations may be noted due to normal production tolerances.
- Waveforms are taken with a oscilloscope. Voltage variations may be noted due to normal production tolerances.
- Signal path.
  : TUNER (FM/AM)
  : TAPE PLAY
  : RECORD
  : DIGITAL INPUT
  : DVD/CD PLAY
  : MIC INPUT
- Abbreviation
  AUS : Australian model
  EA : Saudi Arabia model
  KR : Korean model
  MX : Mexican model
  SP : Singapore model
  TH : Thai model

- **Circuit Boards Location**

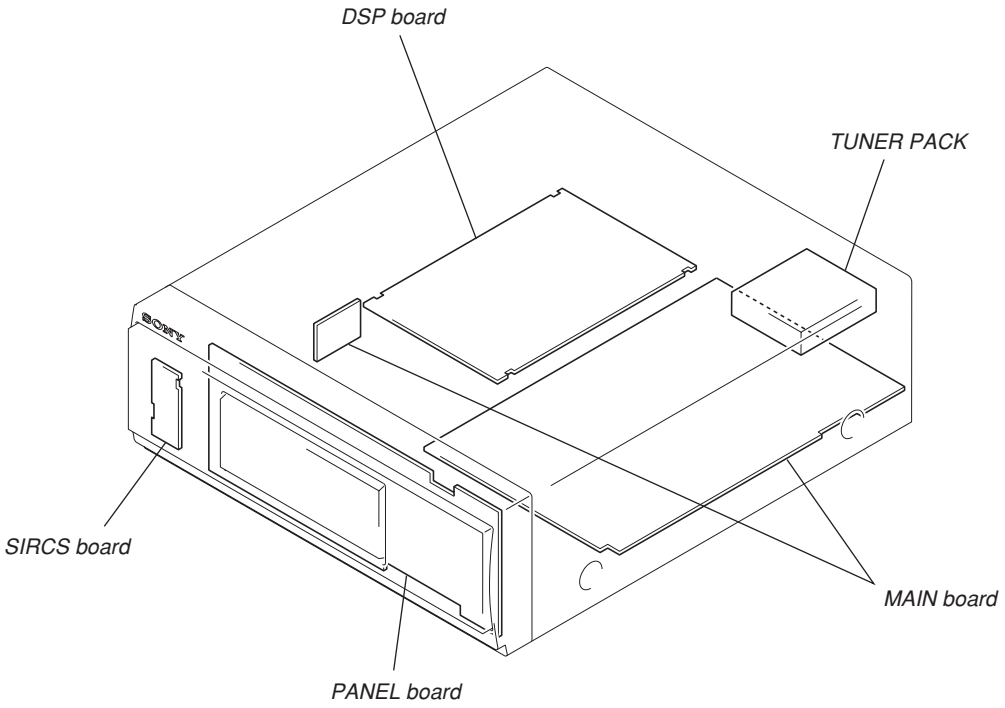

• **Waveforms**

– MAIN Board –

❶ IC501 ⑪ (XCOUT)

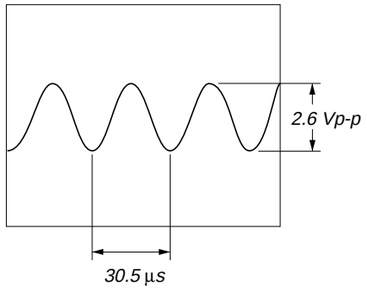

❷ IC501 ⑬ (XOUT)

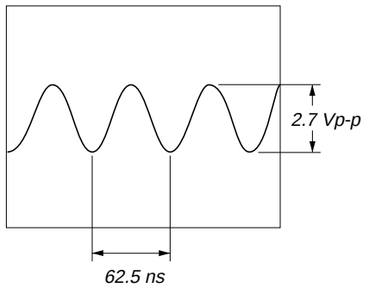

– DSP Board –

❶ IC601 ⑨ (MCLK1), IC604 ⑳ (XMCK), ㉑ (XOUT)

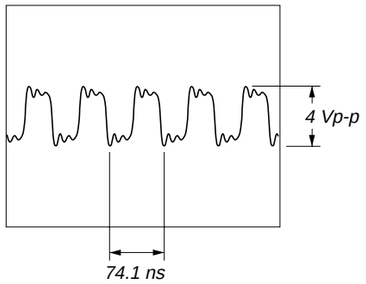

❷ IC601 ⑭ (SCKOUT)

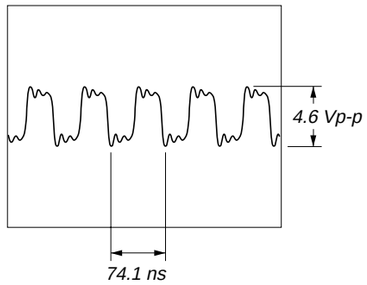

❸ IC601 ⑲ (LRCKO), IC605 ⑤ (LRCK), IC606 ③ (LRCK (I))

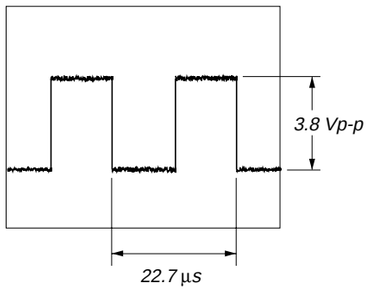

❺ IC601 ㉒ (KFSIO), IC604 ⑬ (CKOUT)

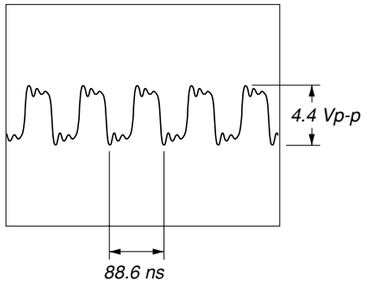

❻ IC601 ㉘ (LRCKI2), IC604 ⑮ (LRCK)

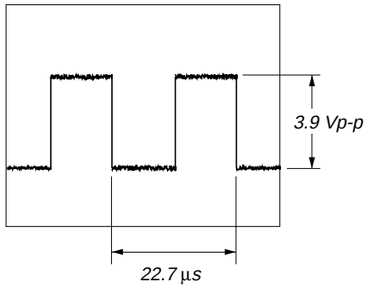

❼ IC601 ㉙ (BCKI2), IC604 ⑭ (BCK)

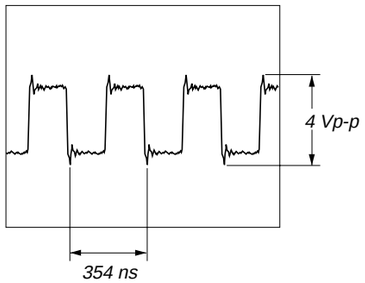

– PANEL Board –

❶ IC601 ㊸ (XOUT)

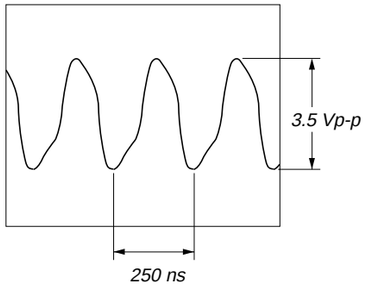

❹ IC601 ⑳ (BCKO), IC605 ④ (BCK), IC606 ① (BCK (I))

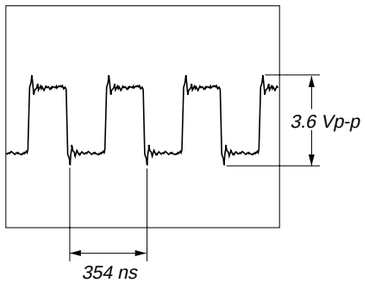

❽ IC606 ⑯ (MCLK (I))

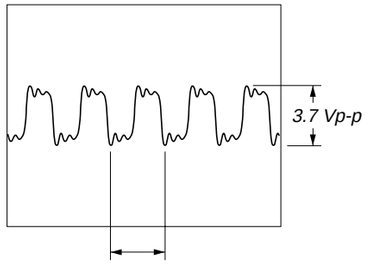

• **IC Block Diagrams**

– DSP Board –

IC604 LC89056W-E

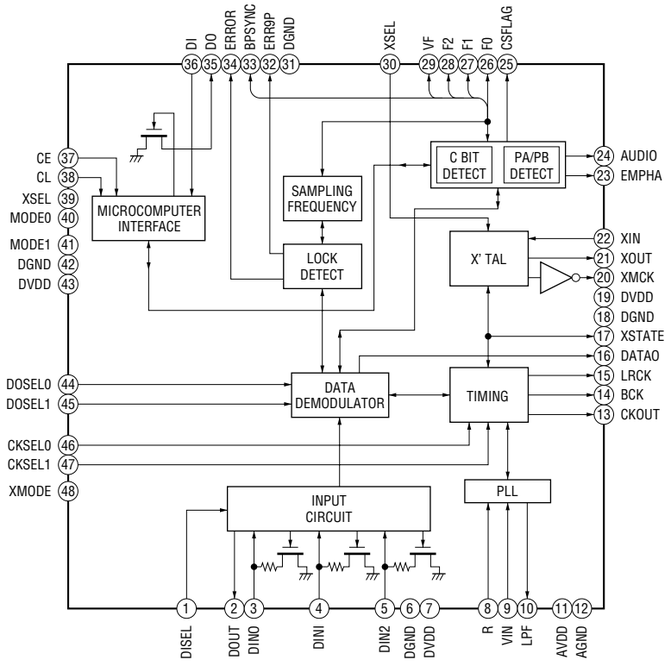

IC605 AK4527

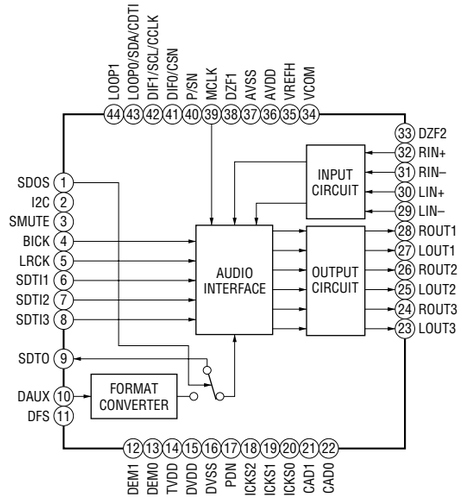

IC606 PCM1748E/2K

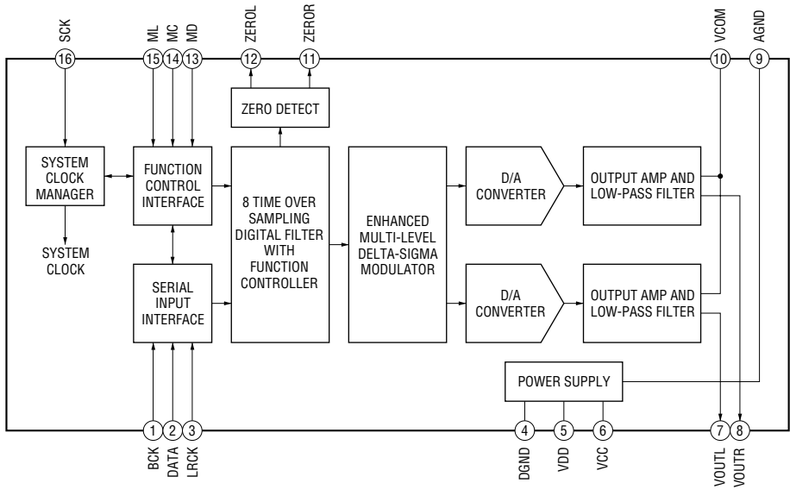

5-2. SCHEMATIC DIAGRAM – MAIN Board (1/2) –

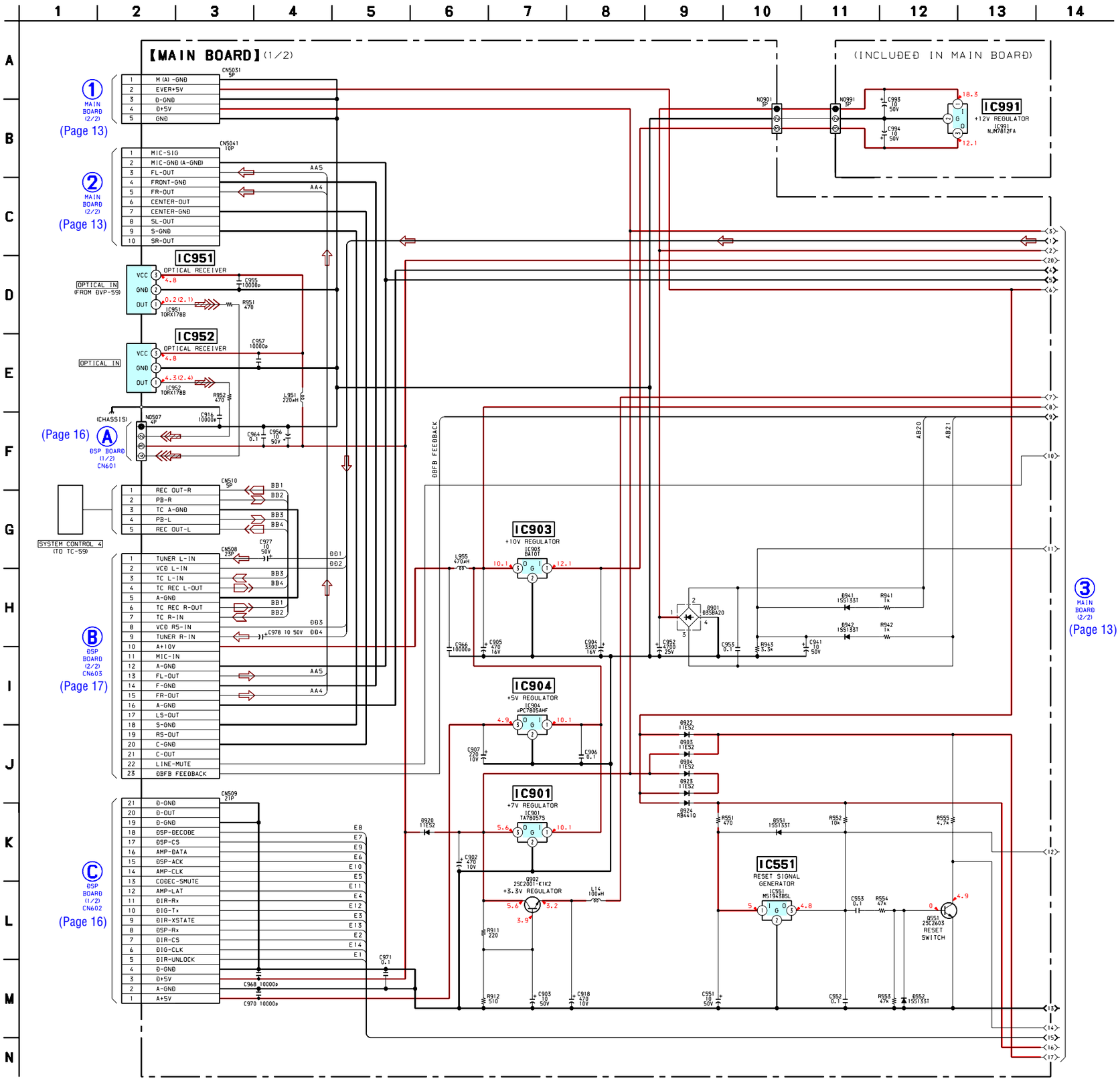

5-3. SCHEMATIC DIAGRAM – MAIN Board (2/2) – • See page 11 for Waveforms.

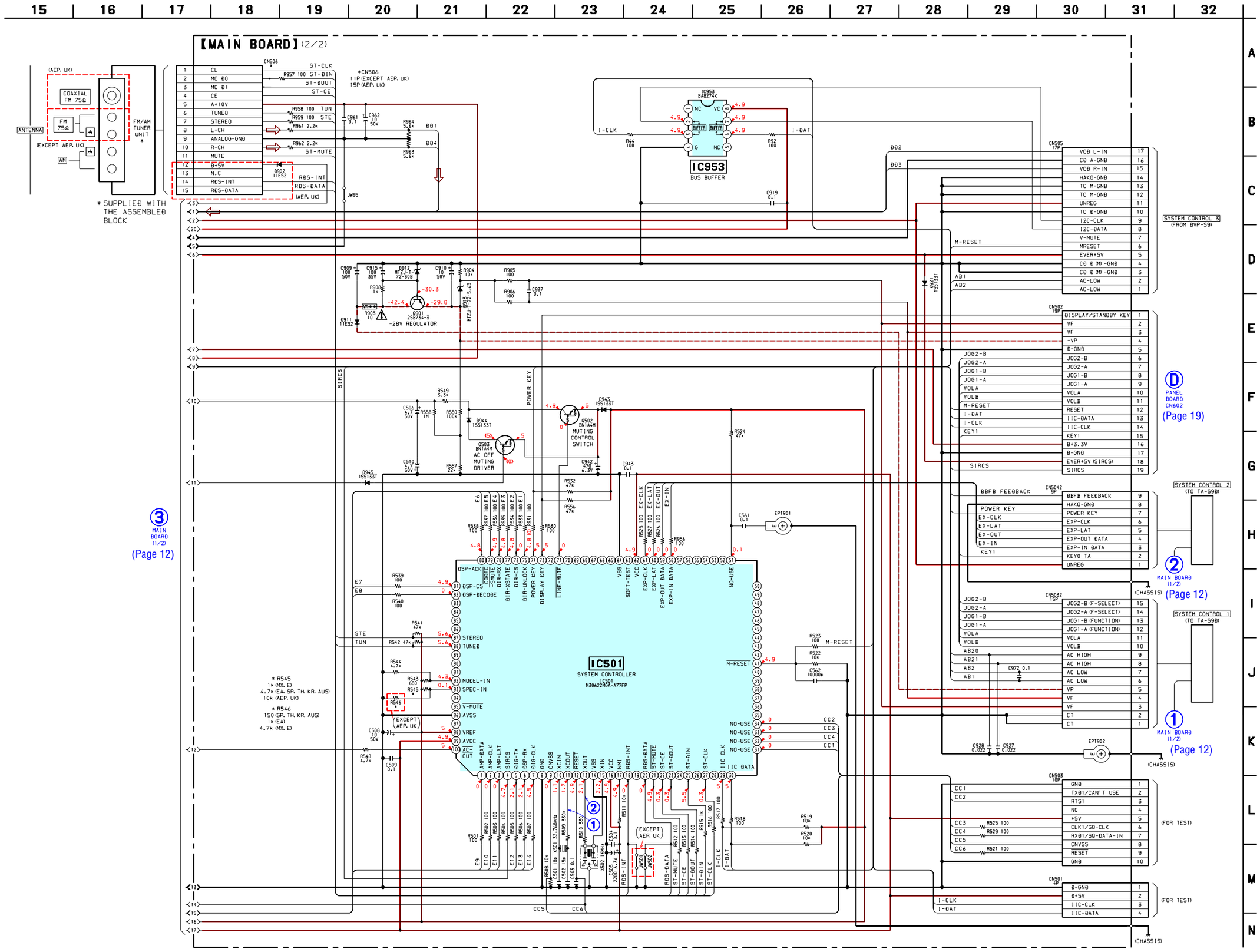

The components identified by mark ⚠ or dotted line with mark ⚠ are critical for safety.
Replace only with part number specified.

5-4. PRINTED WIRING BOARD – MAIN Board – • See page 10 for Circuit Boards Location.

- **Semiconductor Location**

Ref. No.	Location
D551	D-4
D552	D-4
D901	C-8
D902	C-7
D903	E-4
D904	E-5
D911	C-6
D912	C-5
D913	C-5
D920	F-4
D921	E-5
D922	D-5
D923	D-5
D924	D-5
D941	C-7
D942	C-7
D943	E-4
D944	E-3
D945	E-4
IC501	C-2
IC551	D-4
IC901	E-6
IC903	D-6
IC904	G-4
IC951	G-10
IC952	F-10
IC953	D-8
IC991	H-8
Q502	E-3
Q503	E-4
Q551	D-4
Q901	C-5
Q902	F-4

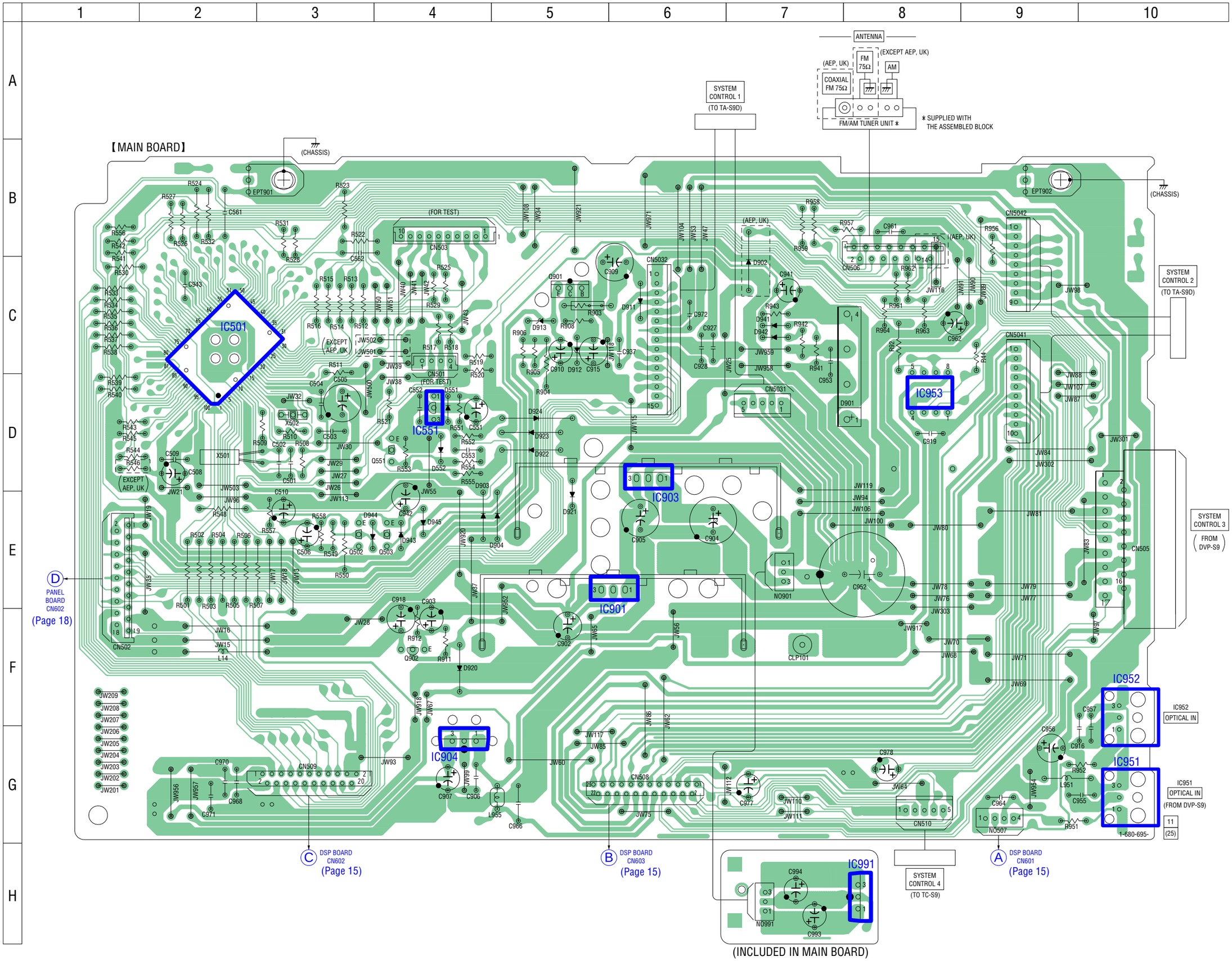

5-5. PRINTED WIRING BOARD – DSP Board – • See page 10 for Circuit Boards Location.

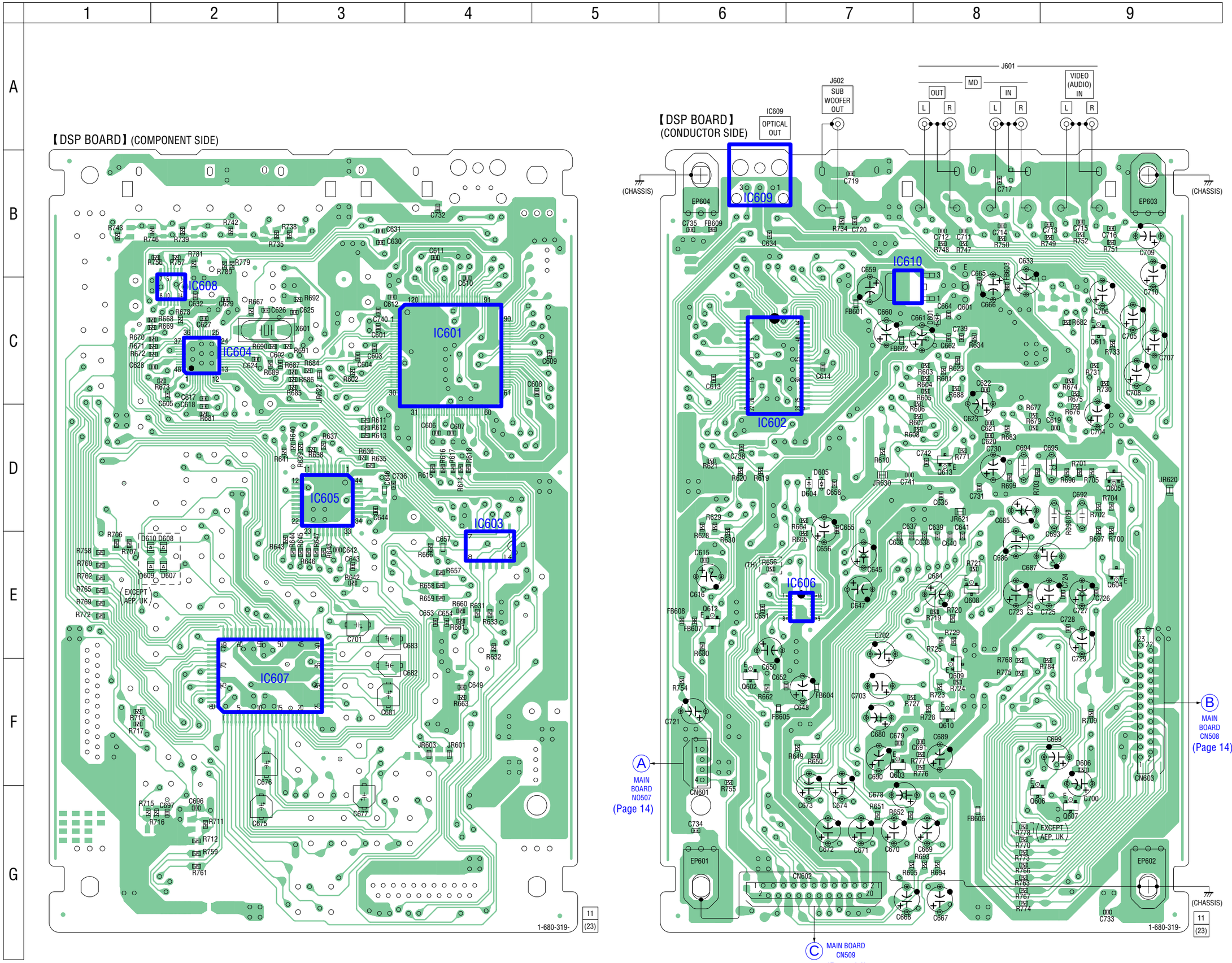

• **Semiconductor Location**

Ref. No.	Location
D601	C-8
D604	D-7
D605	D-7
D607	E-2
D608	E-2
D609	E-1
D610	E-1
IC601	C-4
IC602	C-6
IC603	E-4
IC604	C-2
IC605	D-3
IC606	E-7
IC607	F-2
IC608	C-2
IC609	B-6
IC610	C-7
Q601	C-8
Q602	F-6
Q603	F-7
Q604	E-9
Q605	D-9
Q606	G-8
Q607	G-9
Q608	E-8
Q609	F-8
Q610	F-8
Q611	C-9
Q612	E-6
Q613	D-8

5-6. SCHEMATIC DIAGRAM – DSP Board (1/2) – • See page 11 for Waveforms. • See page 11 for IC Block Diagrams.

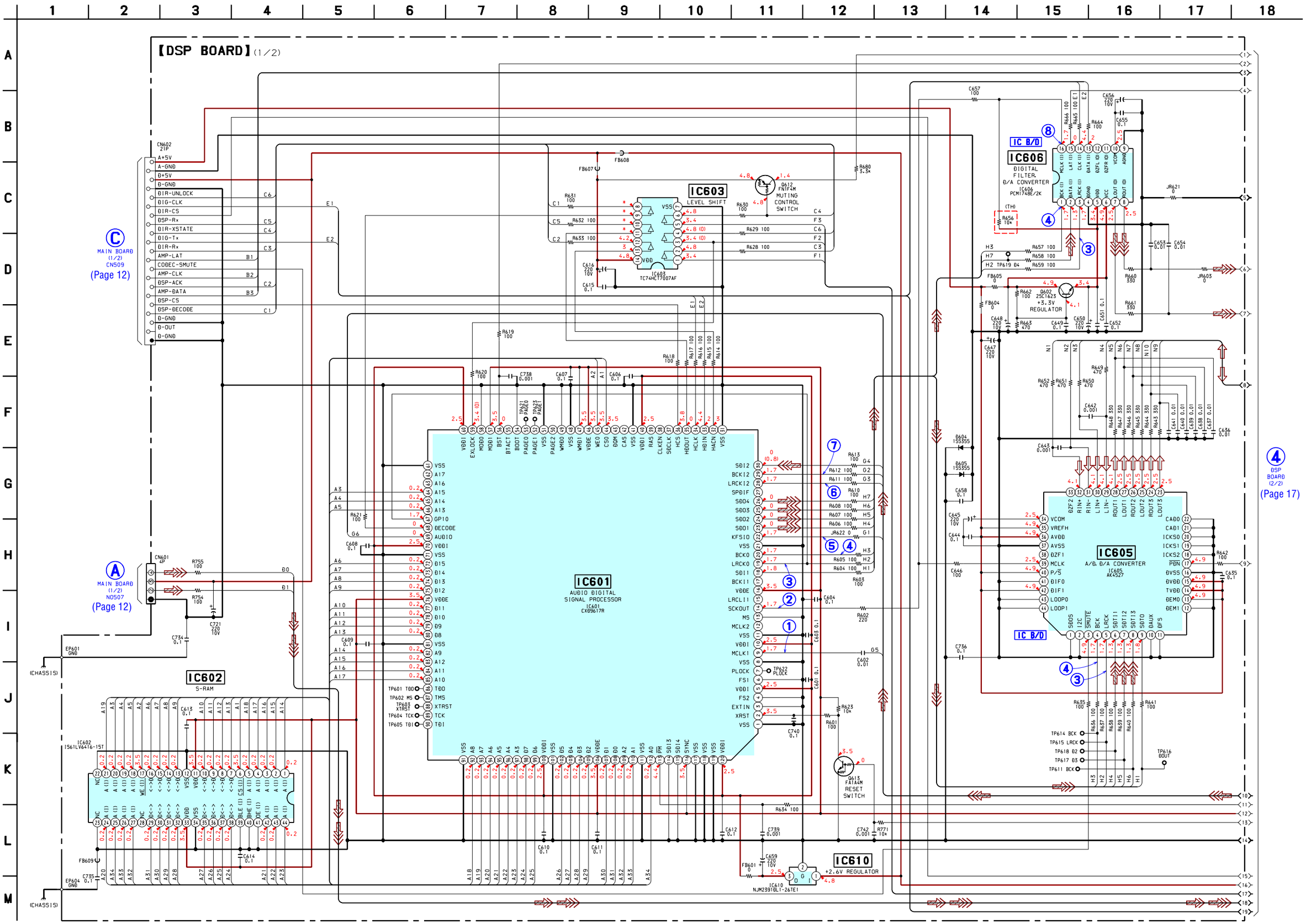

5-7. SCHEMATIC DIAGRAM – DSP Board (2/2) – • See page 11 for Waveforms. • See page 11 for IC Block Diagram.

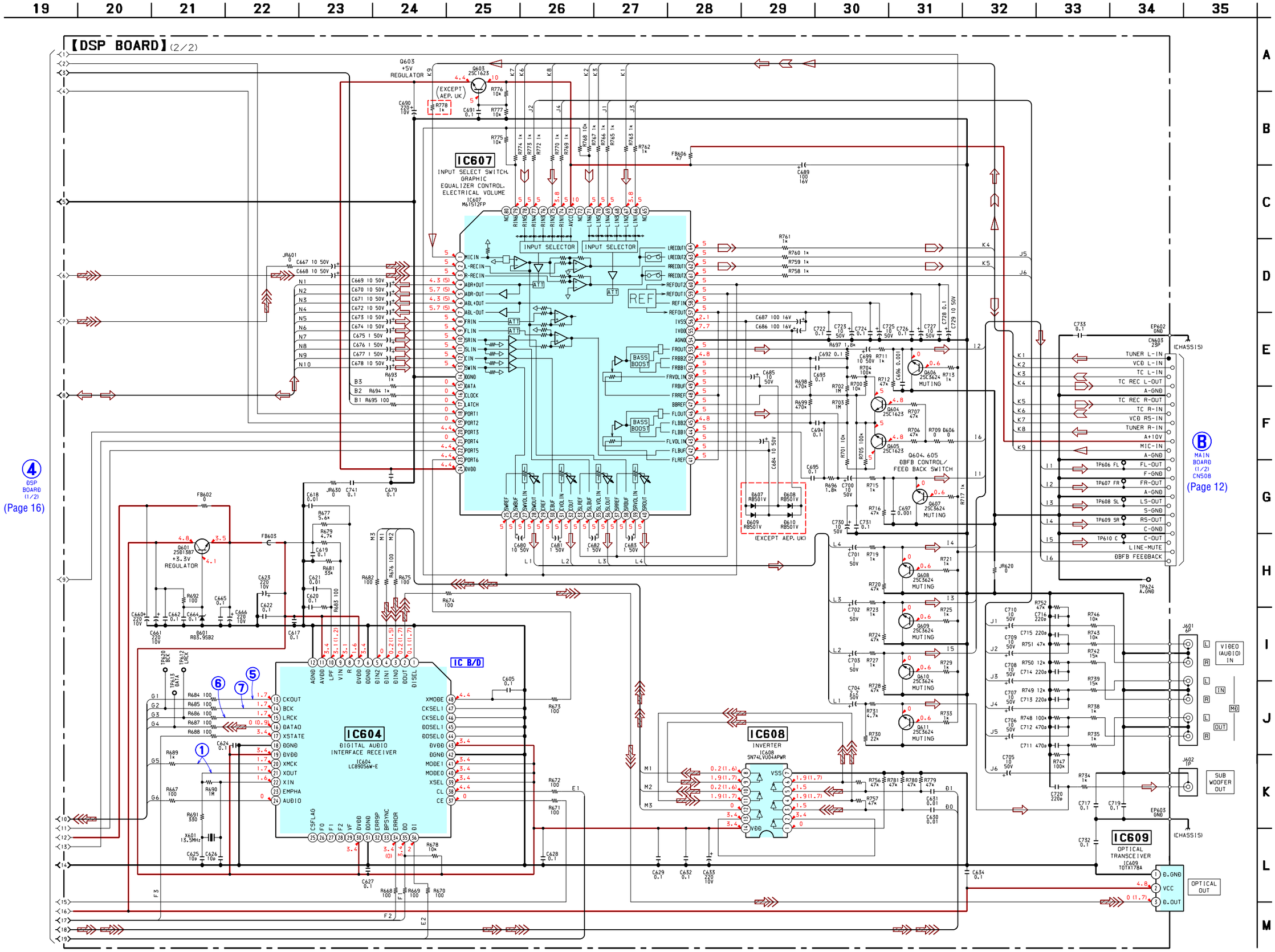

5-8. PRINTED WIRING BOARDS – PANEL Section – • See page 10 for Circuit Boards Location.

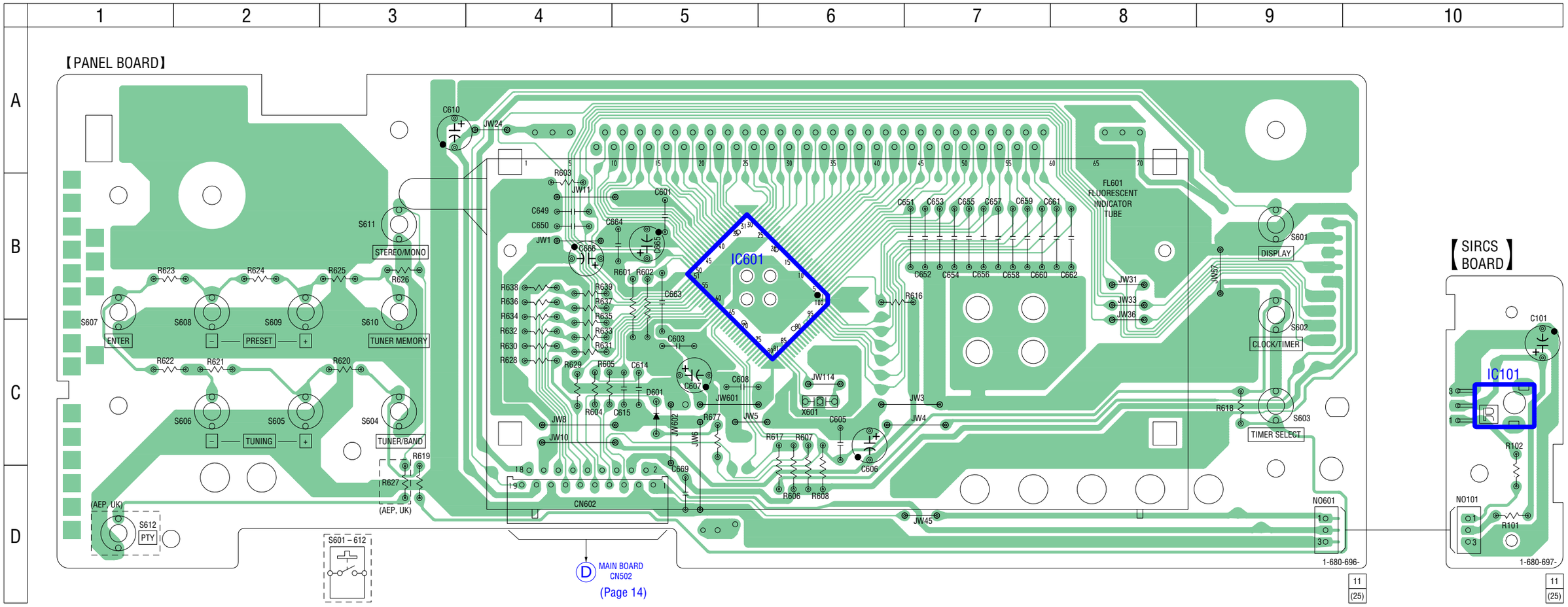

- **Semiconductor Location**

Ref. No.	Location
D601	C-5
IC101	C-10
IC601	B-5

5-9. SCHEMATIC DIAGRAM – PANEL Section – • See page 11 for Waveform.

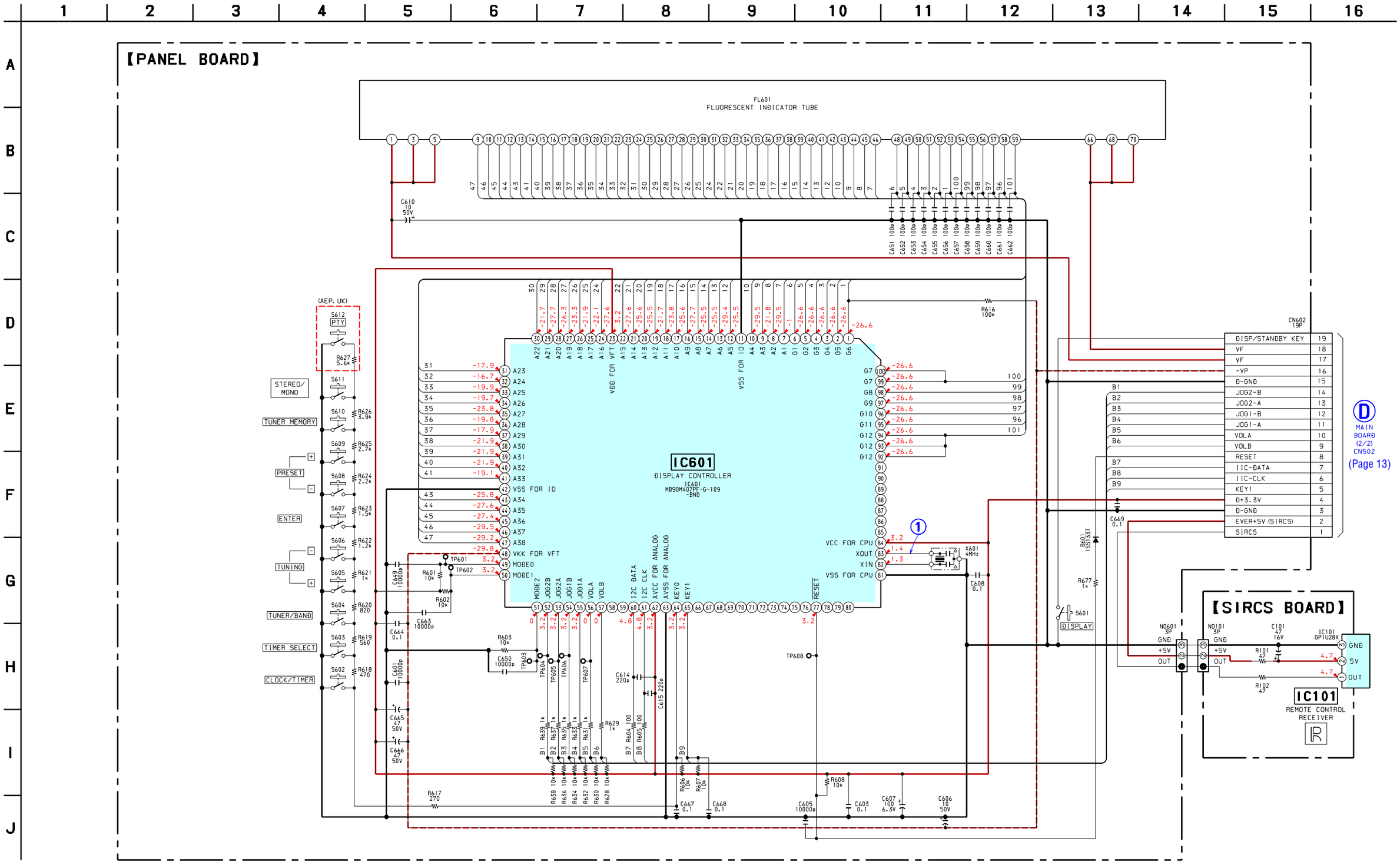

5-10. IC PIN FUNCTION DESCRIPTION

• MAIN BOARD IC501 M30622MGA-A77FP (SYSTEM CONTROLLER)

Pin No.	Pin Name	I/O	Description
1	AMP-DATA	O	Serial data output to the M61512FP (IC607)
2	AMP-CLK	O	Serial data transfer clock signal output to the M61512FP (IC607)
3	AMP-LAT	O	Serial data latch pulse signal output to the M61512FP (IC607)
4	SIRCS	I	Remote control signal input from the remote control receiver (IC101)
5	DIG-TX	O	Serial data output to the CXD9617R (IC601), digital audio interface receiver (IC604) and digital filter (IC606)
6	DSP-RX	I	Serial data input from the digital audio interface receiver (IC604)
7	DIG-CLK	O	Serial data transfer clock signal output to the CXD9617R (IC601), digital audio interface receiver (IC604) and digital filter (IC606)
8	GND	—	Ground terminal
9	CNVSS	—	Not used
10	XCIN	I	Sub system clock input terminal (32.768 kHz)
11	XCOUT	O	Sub system clock output terminal (32.768 kHz)
12	$\overline{\text{RESET}}$	I	System reset signal input from the reset signal generator (IC551) "L": reset For several hundreds msec. after the power supply rises, "L" is input, then it changes to "H"
13	XOUT	O	Main system clock output terminal (16 MHz)
14	VSS	—	Ground terminal
15	XIN	I	Main system clock input terminal (16 MHz)
16	VCC	—	Power supply terminal (+5V)
17	NMI	I	Non-maskable interrupt input terminal Fixed at "H" in this set
18	RDS-INT	I	Serial data transfer clock signal input from the RDS decoder on the FM/AM tuner unit (Used for the AEP and UK models)
19	—	—	Not used (open)
20	RDS-DATA	I	Serial data input from the RDS decoder on the FM/AM tuner unit (Used for the AEP and UK models)
21	$\overline{\text{ST-MUTE}}$	O	Tuner muting on/off control signal output to the FM/AM tuner unit "L": muting on
22	ST-CE	O	Chip enable signal output to the FM/AM tuner unit
23	ST-DOUT	O	Serial data output to the FM/AM tuner unit
24	—	—	Not used (open)
25	ST-DIN	I	Serial data input from the FM/AM tuner unit
26	—	—	Not used (open)
27	ST-CLK	O	Serial data transfer clock signal output to the FM/AM tuner unit
28	—	—	Not used (open)
29	IIC CLK	I/O	Communication data reading clock signal input or transfer clock signal output with the display controller (IC601) and DVP-S9
30	IIC DATA	I/O	Communication data bus with the display controller (IC601) and DVP-S9
31 to 34	NO-USE	—	Not used
35 to 40	—	—	Not used (open)
41	$\overline{\text{M-RESET}}$	O	Reset signal output to the display controller (IC601) "L": reset
42 to 50	—	—	Not used (open)
51	NO-USE	—	Not used
52 to 57	—	—	Not used (open)
58	EXP-IN DATA	I	Serial data input from the I/O expander in the TA-S9D
59	EXP-OUT DATA	O	Serial data output to the I/O expander in the TA-S9D
60	EXP-LAT	O	Serial data latch pulse signal output to the I/O expander in the TA-S9D
61	EXP-CLK	O	Serial data transfer clock signal output to the I/O expander in the TA-S9D

Pin No.	Pin Name	I/O	Description
62	VCC	—	Power supply terminal (+5V)
63	SOFT-TEST	O	Soft test output terminal Not used (open)
64	VSS	—	Ground terminal
65 to 70	—	—	Not used (open)
71	$\overline{\text{LINE-MUTE}}$	O	Audio line muting on/off control signal output to the audio line circuit "L": muting on
72	—	—	Not used (open)
73	DISPLAY KEY	I	DISPLAY switch (S601) input terminal
74	POWER KEY	I	Power on/off switch in the TA-S9D input terminal
75	DIR-UNLOCK	I	PLL lock error and data error flag input from the digital audio interface receiver (IC604)
76	DIR-CS	O	Chip enable signal output to the digital audio interface receiver (IC604)
77	DIR-XSTATE	I	Source clock switching monitor input from the digital audio interface receiver (IC604)
78	DIR-RX	I	Read data input from the digital audio interface receiver (IC604)
79	$\overline{\text{CODEC-SMUTE}}$	O	Soft muting on/off control signal output to the A/D, D/A converter (IC605) "L": muting on
80	DSP-ACK	I	Acknowledge signal input from the CXD9617R (IC601)
81	DSP-CS	O	Chip select signal output to the CXD9617R (IC601)
82	DSP-DECODE	I	Decode signal input from the CXD9617R (IC601)
83 to 86	—	—	Not used (open)
87	STEREO	I	FM stereo detection signal input from the FM/AM tuner unit "L": stereo
88	TUNED	I	Tuning detection signal input from the FM/AM tuner unit "L": tuned
89 to 91	—	—	Not used (open)
92	MODEL-IN	I	Model setting terminal
93	SPEC-IN	I	Specification setting terminal
94	—	—	Not used (open)
95	$\overline{\text{V-MUTE}}$	O	Video muting on/off control signal output terminal "L": muting on Not used (open)
96	AVSS	—	Ground terminal
97	—	—	Not used (open)
98	VREF	I	Reference voltage (+5V) input terminal
99	AVCC	—	Power supply terminal (+5V)
100	$\overline{\text{AC-CUT}}$	I	AC cut on/off detection signal input from the reset signal generator (IC551) "L": AC cut on, "H": AC cut off or checked

20

• **DSP BOARD IC601 CXD9617R (AUDIO DIGITAL SIGNAL PROCESSOR)**

Pin No.	Pin Name	I/O	Description
1	VSS	—	Ground terminal
2	XRST	I	Reset signal input from the M61512FP (IC607) "L": reset
3	EXTIN	I	Master clock signal input terminal Not used (fixed at "L")
4	FS2	I	Sampling frequency selection signal input terminal Not used (fixed at "L")
5	VDDI	—	Power supply terminal (+2.6V)
6	FS1	I	Sampling frequency selection signal input terminal Not used (fixed at "L")
7	PLOCK	O	Internal PLL lock signal output terminal Not used (open)
8	VSS	—	Ground terminal
9	MCLK1	I	Oscillation clock signal input from the digital audio interface receiver (IC604)
10	VDDI	—	Power supply terminal (+2.6V)
11	VSS	—	Ground terminal
12	MCLK2	O	Oscillation clock signal output terminal Not used (open)
13	MS	I	Master/slave selection signal input terminal "L": slave, "H": master (fixed at "L" in this set)
14	SCKOUT	O	Internal system clock signal output to the digital filter (IC606)
15	LRCKI1	I	L/R sampling clock signal (44.1 kHz) input terminal Not used (open)
16	VDDE	—	Power supply terminal (+3.3V)
17	BCKI1	I	Bit clock signal (2.8224 MHz) input terminal Not used (open)
18	SDI1	I	Audio serial data input from the D/A, A/D converter (IC605)
19	LRCKO	O	L/R sampling clock signal (44.1 kHz) output to the D/A, A/D converter (IC605) and digital filter (IC606)
20	BCKO	O	Bit clock signal (2.8224 MHz) output to the D/A, A/D converter (IC605) and digital filter (IC606)
21	VSS	—	Ground terminal
22	KFSIO	I	Audio clock signal input from the digital audio interface receiver (IC604)
23 to 25	SDO1 to SDO3	O	Audio serial data output to the A/D, D/A converter (IC604)
26	SDO4	O	Audio serial data output to the digital filter (IC606)
27	SPDIF	O	S/PDIF signal output terminal Not used (open)
28	LRCKI2	I	L/R sampling clock signal (44.1 kHz) input from the digital audio interface receiver (IC604)
29	BCKI2	I	Bit clock signal (2.8224 MHz) input from the digital audio interface receiver (IC604)
30	SDI2	I	Audio serial data input from the digital audio interface receiver (IC604)
31	VSS	—	Ground terminal
32	HACN	O	Acknowledge signal output to the system controller (IC501)
33	HDIN	I	Write data input from the system controller (IC501)
34	HCLK	I	Clock signal input from the system controller (IC501)
35	HDOUT	O	Read data output to the system controller (IC501)
36	HCS	I	Chip select signal input from the system controller (IC501)
37	SDCLK	O	Clock signal output terminal Not used (open)
38	CLKEN	O	Clock enable signal output terminal Not used (open)
39	RAS	O	Row address strobe signal output terminal Not used (open)
40	VDDI	—	Power supply terminal (+2.6V)
41	VSS	—	Ground terminal
42	CAS	O	Column address strobe signal output terminal Not used (open)
43	DQM	O	Output terminal of data input/output mask Not used (open)
44	CS0	O	Chip select signal output to the S-RAM (IC602)
45	WE0	O	Write enable signal output to the S-RAM (IC602)
46	VDDE	—	Power supply terminal (+3.3V)
47	WMD1	I	S-RAM wait mode setting terminal Fixed at "H" in this set

Pin No.	Pin Name	I/O	Description
48	VSS	—	Ground terminal
49	WMD0	I	S-RAM wait mode setting terminal Fixed at “L” in this set
50	PAGE2	O	Page selection signal output terminal Not used (open)
51	VSS	—	Ground terminal
52, 53	PAGE1, PAGE0	O	Page selection signal output terminal Not used (open)
54	BOOT	I	Boot mode control signal input terminal Not used (fixed at “L”)
55	BTACT	O	Boot mode state display signal output terminal Not used (open)
56	BST	I	Boot trap signal input from the M61512FP (IC607)
57	MOD1	I	PLL input frequency select terminal “L”: 384fs, “H”: 256fs (fixed at “H” in this set)
58	MOD0	I	Mode setting terminal “L”: single chip mode, “H”: use prohibition (fixed at “L” in this set)
59	EXLOCK	I	PLL lock error and data error flag input from the digital audio interface receiver (IC604)
60	VDDI	—	Power supply terminal (+2.6V)
61	VSS	—	Ground terminal
62, 63	A17, A16	O	Address signal output terminal Not used (open)
64 to 66	A15 to A13	O	Address signal output to the S-RAM (IC602)
67	GP10	O	L/R sampling clock signal (44.1 kHz) output to the D/A, A/D converter (IC605) and digital filter (IC606)
68	DECODE	O	Decode signal output to the system controller (IC501)
69	AUDIO	I	Bit 1 input terminal of channel status from the digital audio interface receiver (IC604)
70	VDDI	—	Power supply terminal (+2.6V)
71	VSS	—	Ground terminal
72 to 75	D15 to D12	I/O	Two-way data bus with the S-RAM (IC602)
76	VDDE	—	Power supply terminal (+3.3V)
77 to 80	D11 to D8	I/O	Two-way data bus with the S-RAM (IC602)
81	VSS	—	Ground terminal
82 to 85	A9, A12 to A10	O	Address signal output to the S-RAM (IC602)
86	TDO	O	Simple emulation data output terminal Not used (open)
87	TMS	I	Simple emulation data input start/end detection signal input terminal Not used (open)
88	XTRST	I	Simple emulation asychronous break input terminal Not used (open)
89	TCK	I	Simple emulation clock signal input terminal Not used (open)
90	TDI	I	Simple emulation data input terminal Not used (open)
91	VSS	—	Ground terminal
92 to 97	A8 to A3	O	Address signal output to the S-RAM (IC602)
98, 99	D7, D6	I/O	Two-way data bus with the S-RAM (IC602)
100	VDDI	—	Power supply terminal (+2.6V)
101	VSS	—	Ground terminal
102 to 105	D5 to D2	I/O	Two-way data bus with the S-RAM (IC602)
106	VDDE	—	Power supply terminal (+3.3V)
107, 108	D1, D0	I/O	Two-way data bus with the S-RAM (IC602)
109, 110	A2, A1	O	Address signal output to the S-RAM (IC602)
111	VSS	—	Ground terminal
112	A0	O	Address signal output to the S-RAM (IC602)
113	$\overline{PM}$	I	PLL reset signal input from the M61512FP (IC607) “L”: reset
114, 115	SDI3, SDI4	I	Audio serial data input terminal Not used (fixed at “L”)
116	SYNC	I	Synchronous/asychronous selection signal input terminal “L”: Synchronous, “H”: asynchronous (fixed at “H” in this set)
117 to 119	VSS	—	Ground terminal
120	VDDI	—	Power supply terminal (+2.6V)

• **DSP BOARD IC604 LC89056W-E (DIGITAL AUDIO INTERFACE RECEIVER)**

Pin No.	Pin Name	I/O	Description
1	DISEL	I	Selection terminal of data input terminal Fixed at “L” in this set
2	DOUT	O	Digital data output to the optical transceiver (IC609)
3	DIN0	I	Digital data input from the optical receiver (IC952) (for DVP-S9)
4	DIN1	I	Digital data input from the optical receiver (IC951) (for external input)
5	DIN2	I	Digital data input terminal Not used (fixed at “L”)
6	DGND	—	Ground terminal (digital system)
7	DVDD	—	Power supply terminal (+3.3V) (digital system)
8	R	I	VCO gain control input terminal
9	VIN	I	VCO free run frequency setting input terminal
10	LPF	O	PLL loop filter setting output terminal
11	AVDD	—	Power supply terminal (+3.3V) (analog system)
12	AGND	—	Ground terminal (analog system)
13	CKOUT	O	Audio clock signal output to the CXD9617R (IC601)
14	BCK	O	Bit clock signal (2.8224 MHz) output to the CXD9617R (IC601)
15	LRCK	O	L/R sampling clock signal (44.1 kHz) output to the CXD9617R (IC601)
16	DATAO	O	Audio serial data output to the CXD9617R (IC601)
17	XSTATE	O	Source clock switching monitor output to the system controller (IC501)
18	DGND	—	Ground terminal (digital system)
19	DVDD	—	Power supply terminal (+3.3V) (digital system)
20	XMCK	O	Oscillation clock signal output to the CXD9617R (IC601)
21	XOUT	O	System clock output terminal (13.5 MHz)
22	XIN	I	System clock input terminal (13.5 MHz)
23	EMPHA	O	Emphasis information of channel status output terminal Not used (open)
24	AUDIO	O	Bit 1 output terminal of channel status to the CXD9617R (IC601)
25	CSFLAG	O	Top 40 bit renovation flag output terminal of channel status Not used (open)
26 to 28	F0 to F2	O	Input frequency calculation result output terminal Not used (open)
29	VF	O	Validity flag output terminal Not used (open)
30	DVDD	—	Power supply terminal (+3.3V) (digital system)
31	DGND	—	Ground terminal (digital system)
32	ERR9P	O	Nine times continuance data transmission error flag output terminal Not used (open)
33	BPSYNC	O	Non-PCM burst and preamble sync signal output terminal Not used (open)
34	ERROR	O	PLL lock error and data error flag output to the system controller (IC501)
35	DO	O	Read data output to the system controller (IC501)
36	DI	I	Write data input from the system controller (IC501)
37	CE	I	Chip enable signal input from the system controller (IC501)
38	CL	I	Clock signal input from the system controller (IC501)
39	XSEL	I	Selection input terminal of vibrator frequency terminal Fixed at “H” in this set
40	MODE0	I	Mode setting input terminal Fixed at “H” in this set
41	MODE1	I	Mode setting input terminal Fixed at “H” in this set
42	DGND	—	Ground terminal (digital system)
43	DVDD	—	Power supply terminal (+3.3V) (digital system)
44	DOSEL0	I	Output data format selection signal input terminal Fixed at “L” in this set
45	DOSEL1	I	Output data format selection signal input terminal Fixed at “L” in this set
46	CKSEL0	I	Output clock selection signal input terminal Fixed at “L” in this set
47	CKSEL1	I	Output clock selection signal input terminal Fixed at “L” in this set
48	XMODE	I	System reset signal input from the M61512FP (IC607)

• **DSP BOARD IC605 AK4527 (A/D, D/A CONVERTER)**

Pin No.	Pin Name	I/O	Description
1	SDOS	I	Audio serial data source selection signal input terminal “L”: internal ADC output, “H”: DAUX input (fixed at “L” in this set)
2	I2C	I	Serial control mode selection signal input terminal “L”: 3-wire serial, “H”: I2C bus
3	$\overline{\text{SMUTE}}$	I	Soft muting on/off signal input from the system controller (IC501) “L”: muting on
4	BICK	I	Bit clock signal (2.8224 MHz) input from the CXD9617R (IC601)
5	LRCK	I	L/R sampling clock (44.1 kHz) signal input from the CXD9617R (IC601)
6 to 8	SDTI1 to SDIT3	I	Audio serial data input from the CXD9617R (IC601)
9	SDTO	O	Audio serial data output to the CXD9617R (IC601)
10	DAUX	I	Audio serial data input terminal Not used (fixed at “L”)
11	DFS	I	Double speed sampling mode signal input terminal “L”: normal speed, “H”: double speed (fixed at “L” in this set)
12	DEM1	I	De-emphasis signal input terminal Fixed at “L” in this set
13	DEM0	I	De-emphasis signal input terminal Fixed at “H” in this set
14	TVDD	—	Power supply terminal (+5V) (for output buffer)
15	DVDD	—	Power supply terminal (+5V) (digital system)
16	DVSS	—	Ground terminal (digital system)
17	$\overline{\text{PDN}}$	I	Power down and reset signal input from the M61512FP (IC607) “L”: power down and reset
18 to 20	ICKS2 to ICKS0	I	Input clock signal selection terminal Fixed at “L” in this set
21, 22	CAD1, CAD0	I	Chip address signal input terminal Not used (fixed at “L”)
23	LOUT3	O	Analog signal output for center to the M61512FP (IC607)
24	ROUT3	O	Analog signal output for sub woofer to the M61512FP (IC607)
25	LOUT2	O	Analog signal output for surround L-ch to the M61512FP (IC607)
26	ROUT2	O	Analog signal output for surround R-ch to the M61512FP (IC607)
27	LOUT1	O	Analog signal output for front L-ch to the M61512FP (IC607)
28	ROUT1	O	Analog signal output for front R-ch to the M61512FP (IC607)
29	LIN–	I	L-ch analog signal negative input from the M61512FP (IC607)
30	LIN+	I	L-ch analog signal positive input from the M61512FP (IC607)
31	RIN–	I	R-ch analog signal negative input from the M61512FP (IC607)
32	RIN+	I	R-ch analog signal positive input from the M61512FP (IC607)
33	DZF2	I	Zero input detection terminal Not used (open)
34	VCOM	O	Common voltage output terminal Large external capacitor is used to reduce power supply noise
35	VREFH	I	Reference voltage (+5V) input terminal
36	AVDD	—	Power supply terminal (+5V) (analog system)
37	AVSS	—	Ground terminal (analog system)
38	DZF1	I	Zero input detection terminal Not used (open)
39	MCLK	I	Master clock signal input from the CXD9617R (IC601)
40	P/$\overline{\text{S}}$	I	Parallel/serial selection signal input terminal “L”: serial control mode, “H”: parallel control mode (fixed at “H” in this set)
41	DIF0	I	Audio data interface format terminal Fixed at “L” in this set
42	DIF1	I	Audio data interface format terminal Fixed at “H” in this set
43, 44	LOOP0, LOOP1	I	Loop back mode setting terminal Fixed at “L” in this set

• **PANEL BOARD IC601 MB90M407PF-G-109-BND (DISPLAY CONTROLLER)**

Pin No.	Pin Name	I/O	Description
1 to 6	G6 to G1	O	Grid drive signal output to the fluorescent indicator tube (FL601)
7 to 10	A1 to A4	O	Segment drive signal output to the fluorescent indicator tube (FL601)
11	VSS FOR IO	—	Ground terminal (for I/O)
12 to 22	A5 to A15	O	Segment drive signal output to the fluorescent indicator tube (FL601)
23	VDD FOR VFT	—	Power supply terminal (+3.3V) (for VFT)
24 to 41	A16 to A33	O	Segment drive signal output to the fluorescent indicator tube (FL601)
42	VSS FOR IO	—	Ground terminal (for I/O)
43 to 47	A34 toA38	O	Segment drive signal output to the fluorescent indicator tube (FL601)
48	VKK FOR VFT	—	Power supply terminal (–28V) (for VFT)
49	MODE0	—	Chip mode selection terminal Not used (fixed at "H")
50	MODE1	—	Chip mode selection terminal Not used (fixed at "H")
51	MODE2	—	Chip mode selection terminal Not used (fixed at "L")
52	JOG2B	I	Jog dial pulse input from the rotary encoder (for sound) in the TA-S9D (B phase input)
53	JOG2A	I	Jog dial pulse input from the rotary encoder (for sound) in the TA-S9D (A phase input)
54	JOG1B	I	Jog dial pulse input from the rotary encoder (for function) in the TA-S9D (B phase input)
55	JOG1A	I	Jog dial pulse input from the rotary encoder (for function) in the TA-S9D (A phase input)
56	VOLA	I	Jog dial pulse input from the rotary encoder (for volume) in the TA-S9D (A phase input)
57	VOLB	I	Jog dial pulse input from the rotary encoder (for volume) in the TA-S9D (B phase input)
58, 59	—	—	Not used (open)
60	I2C DATA	I/O	Communication data bus with the system controller (IC501) and DVP-S9
61	I2C CLK	I/O	Communication data reading clock signal input or transfer clock signal output with the system controller (IC501) and DVP-S9
62	AVCC FOR ANALOG	—	Power supply terminal (+3.3V) (for analog)
63	AVSS FOR ANALOG	—	Ground terminal (for analog)
64	KEY0	I	Key input terminal (A/D input) CLOCK/TIMER, TIMER SELECT, TUNER/BAND, TUNING +/–, ENTER, PRESET +/–, TUNER MEMORY, STEREO/MONO, PTY (S602 to S612) keys input PTY (S612) key: Used for the AEP and UK models
65	KEY1	I	Key input terminal for TA-S9D (A/D input)
66 to 76	—	—	Not used (open)
77	$\overline{\text{RESET}}$	I	Reset signal input from the system controller (IC501) "L": reset
78 to 80	—	—	Not used (open)
81	VSS FOR CPU	—	Ground terminal (for CPU)
82	XIN	I	System clock input terminal (4 MHz)
83	XOUT	O	System clock output terminal (4 MHz)
84	VCC FOR CPU	—	Power supply terminal (+3.3V)
85 to 91	—	—	Not used (open)
92 to 94	G12	O	Grid drive signal output to the fluorescent indicator tube (FL601)
95 to 98	G11 to G8	O	Grid drive signal output to the fluorescent indicator tube (FL601)
99, 100	G7	O	Grid drive signal output to the fluorescent indicator tube (FL601)

SECTION 6
EXPLODED VIEWS

NOTE:
- -XX and -X mean standardized parts, so they may have some difference from the original one.
- Color Indication of Appearance Parts
  Example:
  KNOB, BALANCE (WHITE) . . . (RED)
  ↑ Parts Color ↑ Cabinet's Color
- Items marked "*" are not stocked since they are seldom required for routine service. Some delay should be anticipated when ordering these items.
- The mechanical parts with no reference number in the exploded views are not supplied.
- Abbreviation
  AUS : Australian model
  EA : Saudi Arabia model
  KR : Korean model
  MX : Mexican model
  SP : Singapore model
  TH : Thai model

6-1. CASE, FRONT PANEL SECTION

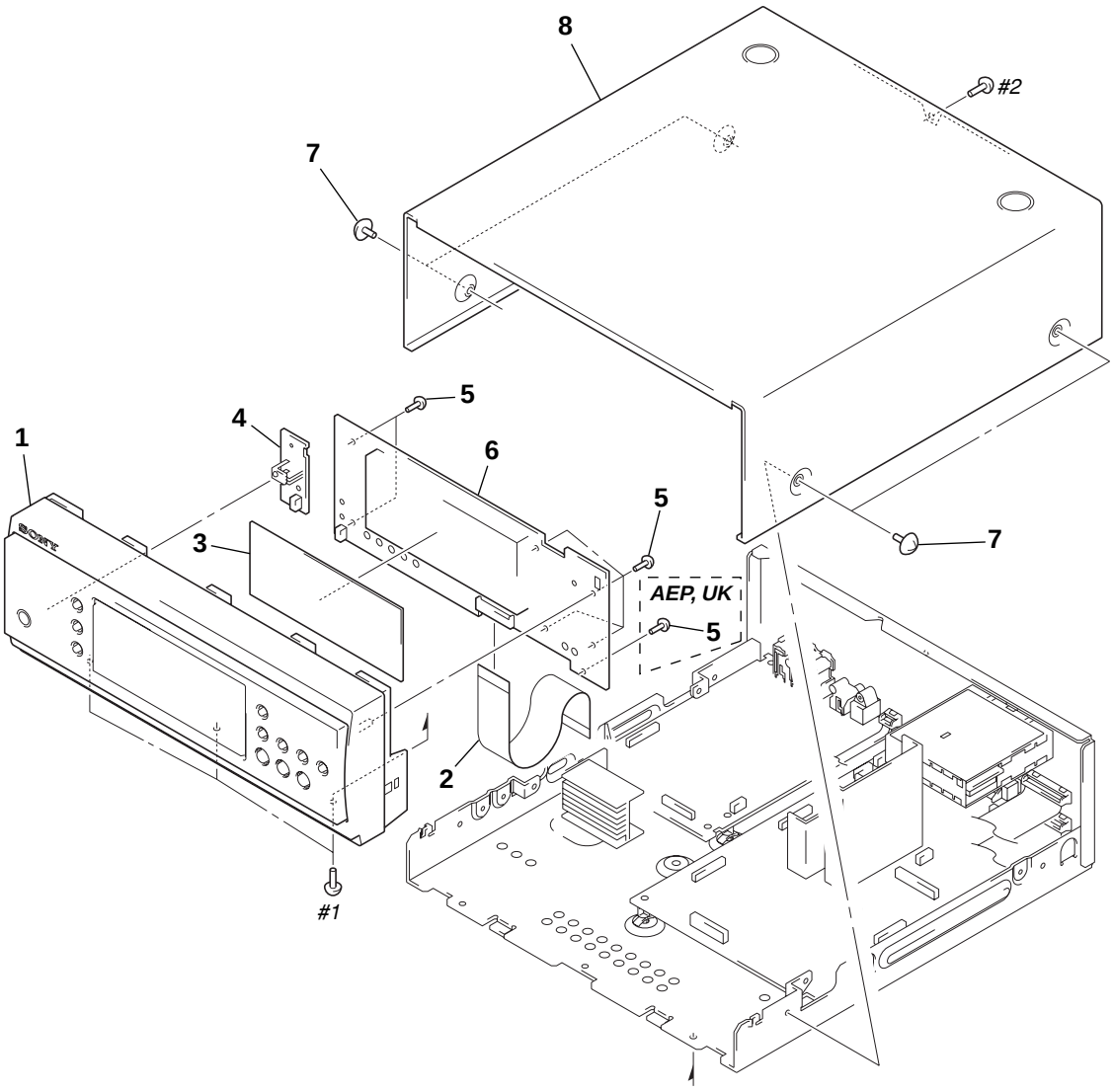

Ref. No.	Part No.	Description	Remark
1	X-4953-451-1	PANEL ASSY (ST), FRONT (AEP, UK)	
1	X-4953-452-1	PANEL ASSY (ST), FRONT	(AUS, EA, E, KR, MX, SP, TH)
2	1-773-114-11	WIRE (FLAT TYPE) (19 CORE)	
3	4-232-351-01	FILTER (FL)	
4	1-680-697-11	SIRCS BOARD	
5	4-951-620-01	SCREW (2.6X8), +BVTP	
6	A-4727-699-A	PANEL BOARD, COMPLETE (AEP, UK)	
6	A-4727-701-A	PANEL BOARD, COMPLETE (TH)	
6	A-4727-702-A	PANEL BOARD, COMPLETE	(AUS, EA, E, KR, MX, SP)
7	3-363-099-21	SCREW (CASE 3 TP2)	
8	4-233-134-31	CASE	
#1	7-685-646-79	SCREW +BVTP (3X8 TYPE2 N-S)	
#2	7-685-871-01	SCREW +BVTT (3X6 (S))	

6-2. CHASSIS SECTION

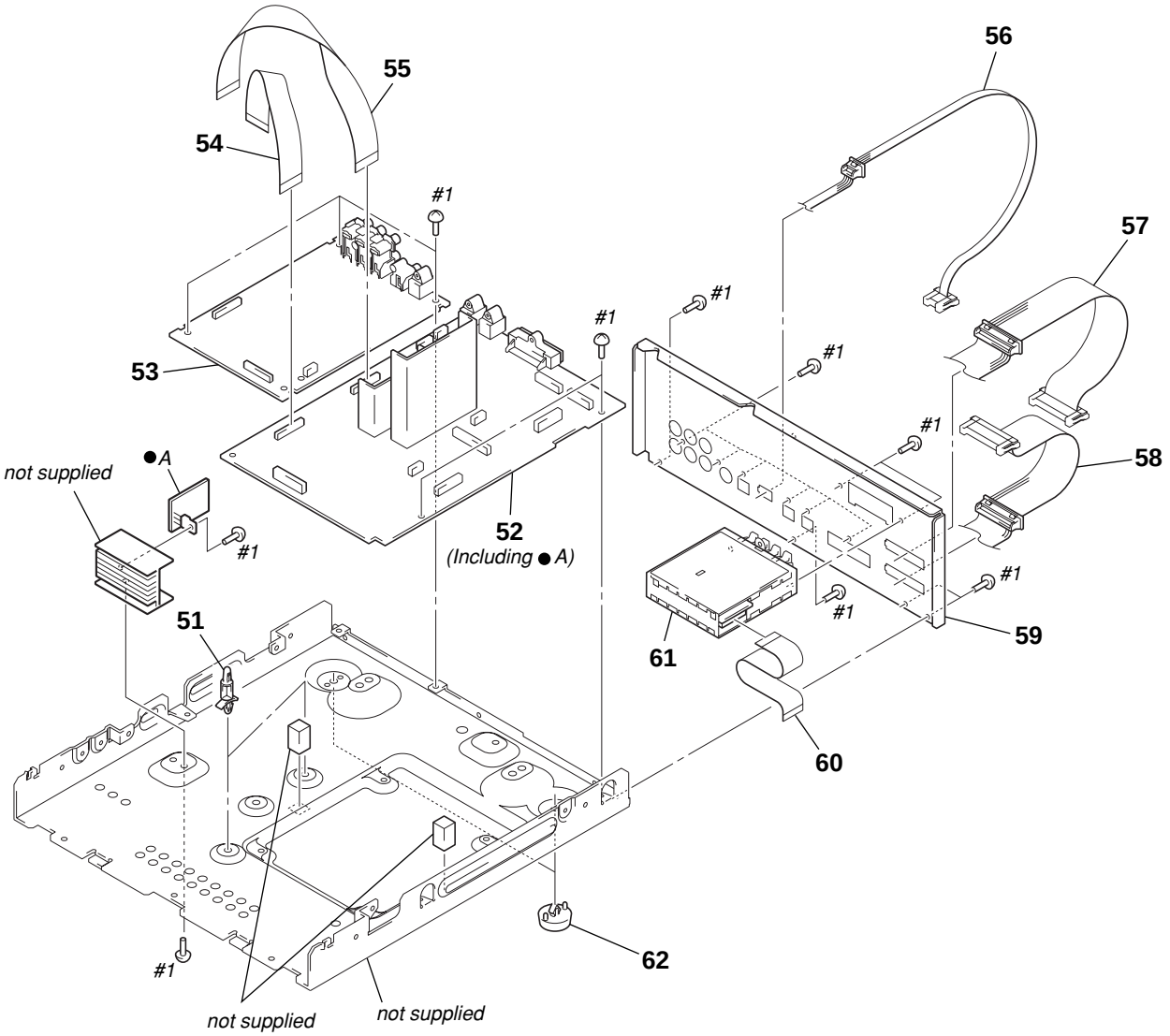

Ref. No.	Part No.	Description	Remark
* 51	4-924-098-01	HOLDER, PC BOARD	
52	A-4727-046-A	MAIN BOARD, COMPLETE (TH)	
52	A-4727-047-A	MAIN BOARD, COMPLETE (AEP, UK)	
52	A-4727-049-A	MAIN BOARD, COMPLETE (E, MX)	
52	A-4727-053-A	MAIN BOARD, COMPLETE (EA)	
52	A-4727-275-A	MAIN BOARD, COMPLETE (AUS, KR, SP)	
53	A-4727-694-A	DSP BOARD, COMPLETE (AUS, EA, E, KR, MX, SP)	
53	A-4727-696-A	DSP BOARD, COMPLETE (AEP, UK)	
53	A-4727-697-A	DSP BOARD, COMPLETE (TH)	
54	1-757-599-11	WIRE (FLAT TYPE) (21 CORE)	
55	1-757-600-11	WIRE (FLAT TYPE) (23 CORE)	
56	1-757-629-11	CORD (WITH CONNECTOR) 5P	
57	1-757-631-11	CORD (WITH CONNECTOR) 20P	
58	1-757-630-11	CORD (WITH CONNECTOR) 19P	
59	4-232-349-01	PANEL (ST-DVD), BACK (AEP, UK)	
59	4-232-349-11	PANEL (ST-DVD), BACK (AUS)	
59	4-232-349-21	PANEL (ST-DVD), BACK (EA)	
59	4-232-349-31	PANEL (ST-DVD), BACK (E, SP)	
59	4-232-349-41	PANEL (ST-DVD), BACK (MX)	
59	4-232-349-51	PANEL (ST-DVD), BACK (TH)	
59	4-232-349-61	PANEL (ST-DVD), BACK (KR)	
60	1-769-940-11	WIRE (FLAT TYPE) (11 CORE) (AUS, EA, E, KR, MX, SP, TH)	
60	1-773-004-11	WIRE (FLAT TYPE) (15 CORE) (AEP, UK)	
61	1-693-529-11	TUNER (FM/AM) (AEP, UK)	
61	1-693-531-71	TUNER (FM/AM) (AUS, EA, E, MX, SP, TH)	
61	1-693-538-11	TUNER (FM/AM) (KR)	
62	4-965-822-01	FOOT	
#1	7-685-646-79	SCREW +BVTP (3X8 TYPE2 N-S)	

DSP

SECTION 7
ELECTRICAL PARTS LIST

NOTE:
- Due to standardization, replacements in the parts list may be different from the parts specified in the diagrams or the components used on the set.
- -XX and -X mean standardized parts, so they may have some difference from the original one.
- RESISTORS
  All resistors are in ohms.
  METAL: Metal-film resistor.
  METAL OXIDE: Metal oxide-film resistor.
  F: nonflammable
- Abbreviation
  AUS : Australian model MX : Mexican model
  EA : Saudi Arabia model SP : Singapore model
  KR : Korean model TH : Thai model
- Items marked "*" are not stocked since they are seldom required for routine service. Some delay should be anticipated when ordering these items.
- SEMICONDUCTORS
  In each case, u: μ, for example:
  uA. . : μA. . uPA. . : μPA. .
  uPB. . : μPB. . uPC. . : μPC. .
  uPD. . : μPD. .
- CAPACITORS
  uF: μF
- COILS
  uH: μH

The components identified by mark ⚠ or dotted line with mark ⚠ are critical for safety.
Replace only with part number specified.

When indicating parts by reference number, please include the board.

Ref. No.	Part No.	Description			Remark
	A-4727-694-A	DSP BOARD, COMPLETE (AUS, EA, E, KR, MX, SP)			
	A-4727-696-A	DSP BOARD, COMPLETE (AEP, UK)			
	A-4727-697-A	DSP BOARD, COMPLETE (TH)			
		**********			
		< CAPACITOR/RESISTOR >			
C601	1-164-156-11	CERAMIC CHIP	0.1uF		25V
C602	1-162-970-11	CERAMIC CHIP	0.01uF	10%	25V
C603	1-164-156-11	CERAMIC CHIP	0.1uF		25V
C604	1-164-156-11	CERAMIC CHIP	0.1uF		25V
C605	1-164-156-11	CERAMIC CHIP	0.1uF		25V
C606	1-164-156-11	CERAMIC CHIP	0.1uF		25V
C607	1-164-156-11	CERAMIC CHIP	0.1uF		25V
C608	1-164-156-11	CERAMIC CHIP	0.1uF		25V
C609	1-164-156-11	CERAMIC CHIP	0.1uF		25V
C610	1-164-156-11	CERAMIC CHIP	0.1uF		25V
C611	1-164-156-11	CERAMIC CHIP	0.1uF		25V
C612	1-164-156-11	CERAMIC CHIP	0.1uF		25V
C613	1-164-156-11	CERAMIC CHIP	0.1uF		25V
C614	1-164-156-11	CERAMIC CHIP	0.1uF		25V
C615	1-164-156-11	CERAMIC CHIP	0.1uF		25V
C616	1-126-934-11	ELECT	220uF	20%	10V
C617	1-164-156-11	CERAMIC CHIP	0.1uF		25V
C618	1-162-970-11	CERAMIC CHIP	0.01uF	10%	25V
C619	1-164-156-11	CERAMIC CHIP	0.1uF		25V
C620	1-164-156-11	CERAMIC CHIP	0.1uF		25V
C621	1-162-970-11	CERAMIC CHIP	0.01uF	10%	25V
C622	1-164-156-11	CERAMIC CHIP	0.1uF		25V
C623	1-126-934-11	ELECT	220uF	20%	10V
C624	1-164-156-11	CERAMIC CHIP	0.1uF		25V
C625	1-162-915-11	CERAMIC CHIP	10PF	0.5PF	50V
C626	1-162-915-11	CERAMIC CHIP	10PF	0.5PF	50V
C627	1-164-156-11	CERAMIC CHIP	0.1uF		25V
C628	1-164-156-11	CERAMIC CHIP	0.1uF		25V
C629	1-164-156-11	CERAMIC CHIP	0.1uF		25V
C630	1-162-970-11	CERAMIC CHIP	0.01uF	10%	25V
C631	1-162-970-11	CERAMIC CHIP	0.01uF	10%	25V
C632	1-164-156-11	CERAMIC CHIP	0.1uF		25V
C633	1-126-934-11	ELECT	220uF	20%	10V
C634	1-164-156-11	CERAMIC CHIP	0.1uF		25V
C635	1-164-156-11	CERAMIC CHIP	0.1uF		25V
C636	1-162-970-11	CERAMIC CHIP	0.01uF	10%	25V
C637	1-162-970-11	CERAMIC CHIP	0.01uF	10%	25V
C638	1-162-970-11	CERAMIC CHIP	0.01uF	10%	25V
C639	1-162-970-11	CERAMIC CHIP	0.01uF	10%	25V
C640	1-162-970-11	CERAMIC CHIP	0.01uF	10%	25V
C641	1-162-970-11	CERAMIC CHIP	0.01uF	10%	25V
C642	1-162-971-11	CERAMIC CHIP	0.001uF	10%	50V
C643	1-162-971-11	CERAMIC CHIP	0.001uF	10%	50V
C644	1-164-156-11	CERAMIC CHIP	0.1uF		25V
C645	1-126-934-11	ELECT	220uF	20%	10V
C646	1-216-809-11	METAL CHIP	100	5%	1/16W
C647	1-126-934-11	ELECT	220uF	20%	10V
C648	1-126-934-11	ELECT	220uF	20%	10V
C649	1-164-360-11	CERAMIC CHIP	0.1uF		16V
C650	1-126-934-11	ELECT	220uF	20%	10V
C651	1-164-360-11	CERAMIC CHIP	0.1uF		16V
C652	1-164-360-11	CERAMIC CHIP	0.1uF		16V
C653	1-162-970-11	CERAMIC CHIP	0.01uF	10%	25V
C654	1-162-970-11	CERAMIC CHIP	0.01uF	10%	25V
C655	1-164-360-11	CERAMIC CHIP	0.1uF		16V
C656	1-126-934-11	ELECT	220uF	20%	10V
C657	1-216-809-11	METAL CHIP	100	5%	1/16W
C658	1-164-156-11	CERAMIC CHIP	0.1uF		25V
C659	1-126-934-11	ELECT	220uF	20%	10V
C660	1-126-934-11	ELECT	220uF	20%	10V
C661	1-126-934-11	ELECT	220uF	20%	10V
C662	1-164-156-11	CERAMIC CHIP	0.1uF		25V
C664	1-164-156-11	CERAMIC CHIP	0.1uF		25V
C665	1-164-156-11	CERAMIC CHIP	0.1uF		25V
C666	1-126-934-11	ELECT	220uF	20%	10V
C667	1-126-964-11	ELECT	10uF	20%	50V
C668	1-126-964-11	ELECT	10uF	20%	50V
C669	1-126-964-11	ELECT	10uF	20%	50V
C670	1-126-964-11	ELECT	10uF	20%	50V
C671	1-126-964-11	ELECT	10uF	20%	50V
C672	1-126-964-11	ELECT	10uF	20%	50V
C673	1-126-964-11	ELECT	10uF	20%	50V
C674	1-126-964-11	ELECT	10uF	20%	50V
C675	1-126-193-11	ELECT	1uF	20%	50V
C676	1-126-193-11	ELECT	1uF	20%	50V
C677	1-126-193-11	ELECT	1uF	20%	50V
C678	1-126-964-11	ELECT	10uF	20%	50V
C679	1-164-156-11	CERAMIC CHIP	0.1uF		25V
C680	1-126-964-11	ELECT	10uF	20%	50V
C681	1-126-193-11	ELECT	1uF	20%	50V

Ref. No.	Part No.	Description			Remark
C682	1-126-193-11	ELECT	1uF	20%	50V
C683	1-126-193-11	ELECT	1uF	20%	50V
C684	1-126-964-11	ELECT	10uF	20%	50V
C685	1-126-964-11	ELECT	10uF	20%	50V
C686	1-126-933-11	ELECT	100uF	20%	16V
C687	1-126-933-11	ELECT	100uF	20%	16V
C689	1-126-933-11	ELECT	100uF	20%	16V
C690	1-126-934-11	ELECT	220uF	20%	10V
C691	1-164-156-11	CERAMIC CHIP	0.1uF		25V
C692	1-136-165-00	MYLAR	0.1uF	5%	50V
C693	1-136-165-00	MYLAR	0.1uF	5%	50V
C694	1-136-165-00	MYLAR	0.1uF	5%	50V
C695	1-136-165-00	MYLAR	0.1uF	5%	50V
C696	1-162-971-11	CERAMIC CHIP	0.001uF	10%	50V
C697	1-162-971-11	CERAMIC CHIP	0.001uF	10%	50V
C699	1-126-964-11	ELECT	10uF	20%	50V
C700	1-126-964-11	ELECT	10uF	20%	50V
C701	1-126-193-11	ELECT	1uF	20%	50V
C702	1-126-960-11	ELECT	1uF	20%	50V
C703	1-126-960-11	ELECT	1uF	20%	50V
C704	1-126-961-11	ELECT	2.2uF	20%	50V
C705	1-126-964-11	ELECT	10uF	20%	50V
C706	1-126-964-11	ELECT	10uF	20%	50V
C707	1-126-964-11	ELECT	10uF	20%	50V
C708	1-126-964-11	ELECT	10uF	20%	50V
C709	1-126-964-11	ELECT	10uF	20%	50V
C710	1-126-964-11	ELECT	10uF	20%	50V
C711	1-162-962-11	CERAMIC CHIP	470PF	10%	50V
C712	1-162-962-11	CERAMIC CHIP	470PF	10%	50V
C713	1-162-957-11	CERAMIC CHIP	220PF	5%	50V
C714	1-162-957-11	CERAMIC CHIP	220PF	5%	50V
C715	1-162-957-11	CERAMIC CHIP	220PF	5%	50V
C716	1-162-957-11	CERAMIC CHIP	220PF	5%	50V
C717	1-164-156-11	CERAMIC CHIP	0.1uF		25V
C719	1-164-156-11	CERAMIC CHIP	0.1uF		25V
C720	1-162-957-11	CERAMIC CHIP	220PF	5%	50V
C721	1-126-934-11	ELECT	220uF	20%	10V
C722	1-164-156-11	CERAMIC CHIP	0.1uF		25V
C723	1-126-964-11	ELECT	10uF	20%	50V
C724	1-164-156-11	CERAMIC CHIP	0.1uF		25V
C725	1-126-964-11	ELECT	10uF	20%	50V
C726	1-164-156-11	CERAMIC CHIP	0.1uF		25V
C727	1-126-964-11	ELECT	10uF	20%	50V
C728	1-164-156-11	CERAMIC CHIP	0.1uF		25V
C729	1-126-964-11	ELECT	10uF	20%	50V
C730	1-126-964-11	ELECT	10uF	20%	50V
C731	1-164-156-11	CERAMIC CHIP	0.1uF		25V
C732	1-164-156-11	CERAMIC CHIP	0.1uF		25V
C733	1-164-156-11	CERAMIC CHIP	0.1uF		25V
C734	1-164-156-11	CERAMIC CHIP	0.1uF		25V
C735	1-164-156-11	CERAMIC CHIP	0.1uF		25V
C736	1-164-156-11	CERAMIC CHIP	0.1uF		25V
C738	1-164-357-11	CERAMIC CHIP	0.001uF	5%	50V
C739	1-164-357-11	CERAMIC CHIP	0.001uF	5%	50V
C740	1-164-156-11	CERAMIC CHIP	0.1uF		25V
C741	1-164-156-11	CERAMIC CHIP	0.1uF		25V
C742	1-164-357-11	CERAMIC CHIP	0.001uF	5%	50V

Ref. No.	Part No.	Description			Remark
		< CONNECTOR >			
CN601	1-506-469-11	PIN, CONNECTOR 4P			
CN602	1-779-289-11	CONNECTOR, FFC (LIF (NON-ZIF)) 21P			
CN603	1-779-291-11	CONNECTOR, FFC (LIF (NON-ZIF)) 23P			
		< DIODE/RESISTOR >			
D601	8-719-158-02	DIODE RD3.9SB2			
D604	8-719-988-61	DIODE 1SS355TE-17			
D605	8-719-988-61	DIODE 1SS355TE-17			
D606	1-216-864-11	METAL CHIP	0	5%	1/16W
D607	8-719-058-24	DIODE RB501V-40TE-17 (EXCEPT AEP, UK)			
D608	8-719-058-24	DIODE RB501V-40TE-17 (EXCEPT AEP, UK)			
D609	8-719-058-24	DIODE RB501V-40TE-17 (EXCEPT AEP, UK)			
D610	8-719-058-24	DIODE RB501V-40TE-17 (EXCEPT AEP, UK)			
		< EARTH TERMINAL >			
* EP601	1-537-738-21	TERMINAL, EARTH			
* EP602	1-537-738-21	TERMINAL, EARTH			
* EP603	1-537-738-21	TERMINAL, EARTH			
* EP604	1-537-738-21	TERMINAL, EARTH			
		< RESISTOR/FERRITE BEAD >			
FB601	1-216-864-11	METAL CHIP	0	5%	1/16W
FB602	1-216-864-11	METAL CHIP	0	5%	1/16W
FB603	1-500-445-21	FERRITE	0uH		
FB604	1-216-864-11	METAL CHIP	0	5%	1/16W
FB605	1-216-864-11	METAL CHIP	0	5%	1/16W
FB606	1-216-805-11	METAL CHIP	47	5%	1/16W
FB607	1-500-445-21	FERRITE	0uH		
FB608	1-500-445-21	FERRITE	0uH		
FB609	1-500-445-21	FERRITE	0uH		
		< IC >			
IC601	8-759-698-76	IC CXD9617R			
IC602	8-759-827-81	IC IS61LV6416-15T (T&R)			
IC603	8-759-238-47	IC TC74HCT7007AF (EL)			
IC604	8-759-825-15	IC LC89056W-E			
IC605	8-759-657-47	IC AK4527			
IC606	8-759-825-13	IC PCM1748E/2K			
IC607	8-749-018-85	IC M61512FP			
IC608	8-759-549-25	IC SN74LVU04APWR			
IC609	8-749-923-04	IC TOTX178A (OPTICAL OUT)			
IC610	8-759-835-63	IC NJM2391DL1-26-TE1			
		< JACK >			
J601	1-774-411-11	JACK, PIN 6P (VIDEO (AUDIO) IN, MD IN/OUT)			
J602	1-774-785-11	JACK, PIN 1P (SUB WOOFER OUT)			
		< JUMPER RESISTOR >			
JR601	1-216-864-11	METAL CHIP	0	5%	1/16W
JR603	1-216-864-11	METAL CHIP	0	5%	1/16W
JR620	1-216-864-11	METAL CHIP	0	5%	1/16W
JR621	1-216-864-11	METAL CHIP	0	5%	1/16W
JR622	1-216-864-11	METAL CHIP	0	5%	1/16W
JR630	1-216-864-11	METAL CHIP	0	5%	1/16W

DSP

Ref. No.	Part No.	Description				Remark
		< TRANSISTOR >				
Q601	8-729-801-93	TRANSISTOR	2SD1387			
Q602	8-729-120-28	TRANSISTOR	2SC1623-L5L6			
Q603	8-729-120-28	TRANSISTOR	2SC1623-L5L6			
Q604	8-729-120-28	TRANSISTOR	2SC1623-L5L6			
Q605	8-729-120-28	TRANSISTOR	2SC1623-L5L6			
Q606	8-729-141-73	TRANSISTOR	2SC3624A-T1L15L16			
Q607	8-729-141-73	TRANSISTOR	2SC3624A-T1L15L16			
Q608	8-729-141-73	TRANSISTOR	2SC3624A-T1L15L16			
Q609	8-729-141-73	TRANSISTOR	2SC3624A-T1L15L16			
Q610	8-729-141-73	TRANSISTOR	2SC3624A-T1L15L16			
Q611	8-729-141-73	TRANSISTOR	2SC3624A-T1L15L16			
Q612	8-729-113-69	TRANSISTOR	FN1F4M-M32			
Q613	8-729-113-14	TRANSISTOR	FA1A4M-T1L33			
		< RESISTOR >				
R601	1-216-809-11	METAL CHIP	100	5%	1/16W	
R602	1-216-813-11	METAL CHIP	220	5%	1/16W	
R603	1-216-809-11	METAL CHIP	100	5%	1/16W	
R604	1-216-809-11	METAL CHIP	100	5%	1/16W	
R605	1-216-809-11	METAL CHIP	100	5%	1/16W	
R606	1-216-809-11	METAL CHIP	100	5%	1/16W	
R607	1-216-809-11	METAL CHIP	100	5%	1/16W	
R608	1-216-809-11	METAL CHIP	100	5%	1/16W	
R610	1-216-809-11	METAL CHIP	100	5%	1/16W	
R611	1-216-809-11	METAL CHIP	100	5%	1/16W	
R612	1-216-809-11	METAL CHIP	100	5%	1/16W	
R613	1-216-809-11	METAL CHIP	100	5%	1/16W	
R614	1-216-809-11	METAL CHIP	100	5%	1/16W	
R615	1-216-809-11	METAL CHIP	100	5%	1/16W	
R616	1-216-809-11	METAL CHIP	100	5%	1/16W	
R617	1-216-809-11	METAL CHIP	100	5%	1/16W	
R618	1-216-809-11	METAL CHIP	100	5%	1/16W	
R619	1-216-809-11	METAL CHIP	100	5%	1/16W	
R620	1-216-809-11	METAL CHIP	100	5%	1/16W	
R621	1-216-809-11	METAL CHIP	100	5%	1/16W	
R623	1-216-833-11	METAL CHIP	10K	5%	1/16W	
R628	1-216-809-11	METAL CHIP	100	5%	1/16W	
R629	1-216-809-11	METAL CHIP	100	5%	1/16W	
R630	1-216-809-11	METAL CHIP	100	5%	1/16W	
R631	1-216-809-11	METAL CHIP	100	5%	1/16W	
R632	1-216-809-11	METAL CHIP	100	5%	1/16W	
R633	1-216-809-11	METAL CHIP	100	5%	1/16W	
R634	1-216-809-11	METAL CHIP	100	5%	1/16W	
R635	1-216-809-11	METAL CHIP	100	5%	1/16W	
R636	1-216-809-11	METAL CHIP	100	5%	1/16W	
R637	1-216-809-11	METAL CHIP	100	5%	1/16W	
R638	1-216-809-11	METAL CHIP	100	5%	1/16W	
R639	1-216-809-11	METAL CHIP	100	5%	1/16W	
R640	1-216-809-11	METAL CHIP	100	5%	1/16W	
R641	1-216-809-11	METAL CHIP	100	5%	1/16W	
R642	1-216-809-11	METAL CHIP	100	5%	1/16W	
R643	1-216-815-11	METAL CHIP	330	5%	1/16W	
R644	1-216-815-11	METAL CHIP	330	5%	1/16W	
R645	1-216-815-11	METAL CHIP	330	5%	1/16W	
R646	1-216-815-11	METAL CHIP	330	5%	1/16W	
R647	1-216-815-11	METAL CHIP	330	5%	1/16W	

Ref. No.	Part No.	Description			Remark
R648	1-216-815-11	METAL CHIP	330	5%	1/16W
R649	1-216-817-11	METAL CHIP	470	5%	1/16W
R650	1-216-817-11	METAL CHIP	470	5%	1/16W
R651	1-216-817-11	METAL CHIP	470	5%	1/16W
R652	1-216-817-11	METAL CHIP	470	5%	1/16W
R656	1-216-833-11	METAL CHIP	10K	5%	1/16W (TH)
R657	1-216-809-11	METAL CHIP	100	5%	1/16W
R658	1-216-809-11	METAL CHIP	100	5%	1/16W
R659	1-216-809-11	METAL CHIP	100	5%	1/16W
R660	1-216-815-11	METAL CHIP	330	5%	1/16W
R661	1-216-815-11	METAL CHIP	330	5%	1/16W
R662	1-216-809-11	METAL CHIP	100	5%	1/16W
R663	1-216-817-11	METAL CHIP	470	5%	1/16W
R664	1-216-809-11	METAL CHIP	100	5%	1/16W
R665	1-216-809-11	METAL CHIP	100	5%	1/16W
R666	1-216-809-11	METAL CHIP	100	5%	1/16W
R667	1-216-809-11	METAL CHIP	100	5%	1/16W
R668	1-216-809-11	METAL CHIP	100	5%	1/16W
R669	1-216-809-11	METAL CHIP	100	5%	1/16W
R670	1-216-809-11	METAL CHIP	100	5%	1/16W
R671	1-216-809-11	METAL CHIP	100	5%	1/16W
R672	1-216-809-11	METAL CHIP	100	5%	1/16W
R673	1-216-809-11	METAL CHIP	100	5%	1/16W
R674	1-216-809-11	METAL CHIP	100	5%	1/16W
R675	1-216-809-11	METAL CHIP	100	5%	1/16W
R676	1-216-809-11	METAL CHIP	100	5%	1/16W
R677	1-216-830-11	METAL CHIP	5.6K	5%	1/16W
R678	1-216-833-11	METAL CHIP	10K	5%	1/16W
R679	1-216-829-11	METAL CHIP	4.7K	5%	1/16W
R680	1-216-827-11	METAL CHIP	3.3K	5%	1/16W
R681	1-216-839-11	METAL CHIP	33K	5%	1/16W
R682	1-216-809-11	METAL CHIP	100	5%	1/16W
R683	1-216-809-11	METAL CHIP	100	5%	1/16W
R684	1-216-809-11	METAL CHIP	100	5%	1/16W
R685	1-216-809-11	METAL CHIP	100	5%	1/16W
R686	1-216-809-11	METAL CHIP	100	5%	1/16W
R687	1-216-809-11	METAL CHIP	100	5%	1/16W
R688	1-216-809-11	METAL CHIP	100	5%	1/16W
R689	1-216-821-11	METAL CHIP	1K	5%	1/16W
R690	1-216-857-11	METAL CHIP	1M	5%	1/16W
R691	1-216-815-11	METAL CHIP	330	5%	1/16W
R692	1-216-809-11	METAL CHIP	100	5%	1/16W
R693	1-216-821-11	METAL CHIP	1K	5%	1/16W
R694	1-216-821-11	METAL CHIP	1K	5%	1/16W
R695	1-216-809-11	METAL CHIP	100	5%	1/16W
R696	1-216-824-11	METAL CHIP	1.8K	5%	1/16W
R697	1-216-824-11	METAL CHIP	1.8K	5%	1/16W
R698	1-216-853-11	METAL CHIP	470K	5%	1/16W
R699	1-216-853-11	METAL CHIP	470K	5%	1/16W
R700	1-216-833-11	METAL CHIP	10K	5%	1/16W
R701	1-216-833-11	METAL CHIP	10K	5%	1/16W
R702	1-216-857-11	METAL CHIP	1M	5%	1/16W
R703	1-216-857-11	METAL CHIP	1M	5%	1/16W
R704	1-216-845-11	METAL CHIP	100K	5%	1/16W
R705	1-216-845-11	METAL CHIP	100K	5%	1/16W
R706	1-216-841-11	METAL CHIP	47K	5%	1/16W
R707	1-216-841-11	METAL CHIP	47K	5%	1/16W

DSP MAIN

Ref. No.	Part No.	Description			Remark
R709	1-216-864-11	METAL CHIP	0	5%	1/16W
R711	1-216-821-11	METAL CHIP	1K	5%	1/16W
R712	1-216-841-11	METAL CHIP	47K	5%	1/16W
R713	1-216-821-11	METAL CHIP	1K	5%	1/16W
R715	1-216-821-11	METAL CHIP	1K	5%	1/16W
R716	1-216-841-11	METAL CHIP	47K	5%	1/16W
R717	1-216-821-11	METAL CHIP	1K	5%	1/16W
R719	1-216-821-11	METAL CHIP	1K	5%	1/16W
R720	1-216-841-11	METAL CHIP	47K	5%	1/16W
R721	1-216-821-11	METAL CHIP	1K	5%	1/16W
R723	1-216-821-11	METAL CHIP	1K	5%	1/16W
R724	1-216-841-11	METAL CHIP	47K	5%	1/16W
R725	1-216-821-11	METAL CHIP	1K	5%	1/16W
R727	1-216-821-11	METAL CHIP	1K	5%	1/16W
R728	1-216-841-11	METAL CHIP	47K	5%	1/16W
R729	1-216-821-11	METAL CHIP	1K	5%	1/16W
R730	1-216-837-11	METAL CHIP	22K	5%	1/16W
R731	1-216-829-11	METAL CHIP	4.7K	5%	1/16W
R733	1-216-821-11	METAL CHIP	1K	5%	1/16W
R734	1-216-821-11	METAL CHIP	1K	5%	1/16W
R735	1-216-821-11	METAL CHIP	1K	5%	1/16W
R738	1-216-821-11	METAL CHIP	1K	5%	1/16W
R739	1-216-835-11	METAL CHIP	15K	5%	1/16W
R742	1-216-835-11	METAL CHIP	15K	5%	1/16W
R743	1-216-833-11	METAL CHIP	10K	5%	1/16W
R746	1-216-833-11	METAL CHIP	10K	5%	1/16W
R747	1-216-845-11	METAL CHIP	100K	5%	1/16W
R748	1-216-845-11	METAL CHIP	100K	5%	1/16W
R749	1-216-834-11	METAL CHIP	12K	5%	1/16W
R750	1-216-834-11	METAL CHIP	12K	5%	1/16W
R751	1-216-841-11	METAL CHIP	47K	5%	1/16W
R752	1-216-841-11	METAL CHIP	47K	5%	1/16W
R754	1-216-809-11	METAL CHIP	100	5%	1/16W
R755	1-216-809-11	METAL CHIP	100	5%	1/16W
R756	1-216-841-11	METAL CHIP	47K	5%	1/16W
R757	1-216-841-11	METAL CHIP	47K	5%	1/16W
R758	1-216-821-11	METAL CHIP	1K	5%	1/16W
R759	1-216-821-11	METAL CHIP	1K	5%	1/16W
R760	1-216-821-11	METAL CHIP	1K	5%	1/16W
R761	1-216-821-11	METAL CHIP	1K	5%	1/16W
R762	1-216-821-11	METAL CHIP	1K	5%	1/16W
R763	1-216-821-11	METAL CHIP	1K	5%	1/16W
R765	1-216-821-11	METAL CHIP	1K	5%	1/16W
R766	1-216-821-11	METAL CHIP	1K	5%	1/16W
R767	1-216-821-11	METAL CHIP	1K	5%	1/16W
R768	1-216-833-11	METAL CHIP	10K	5%	1/16W
R769	1-216-821-11	METAL CHIP	1K	5%	1/16W
R770	1-216-821-11	METAL CHIP	1K	5%	1/16W
R771	1-216-833-11	METAL CHIP	10K	5%	1/16W
R772	1-216-821-11	METAL CHIP	1K	5%	1/16W
R773	1-216-821-11	METAL CHIP	1K	5%	1/16W
R774	1-216-821-11	METAL CHIP	1K	5%	1/16W
R775	1-216-833-11	METAL CHIP	10K	5%	1/16W
R776	1-216-833-11	METAL CHIP	10K	5%	1/16W
R777	1-216-833-11	METAL CHIP	10K	5%	1/16W
R778	1-216-821-11	METAL CHIP	1K	5%	1/16W
				(EXCEPT AEP, UK)	
R779	1-216-841-11	METAL CHIP	47K	5%	1/16W
R780	1-216-841-11	METAL CHIP	47K	5%	1/16W
R781	1-216-841-11	METAL CHIP	47K	5%	1/16W
		< VIBRATOR >			
X601	1-579-993-21	VIBRATOR, CERAMIC (13.5MHz)			

****

	A-4727-046-A	MAIN BOARD, COMPLETE (TH)			
	A-4727-047-A	MAIN BOARD, COMPLETE (AEP, UK)			
	A-4727-049-A	MAIN BOARD, COMPLETE (E, MX)			
	A-4727-053-A	MAIN BOARD, COMPLETE (EA)			
	A-4727-275-A	MAIN BOARD, COMPLETE (AUS, KR, SP)			
		**********			
	7-685-646-79	SCREW +BVTP 3X8 TYPE2 N-S			
		< CAPACITOR >			
C501	1-162-205-31	CERAMIC	18PF	5%	50V
C502	1-162-203-31	CERAMIC	15PF	5%	50V
C503	1-164-159-11	CERAMIC	0.1uF		50V
C504	1-164-159-11	CERAMIC	0.1uF		50V
C505	1-104-656-11	ELECT	2200uF	20%	6.3V
C506	1-126-963-11	ELECT	4.7uF	20%	50V
C508	1-126-964-11	ELECT	10uF	20%	50V
C509	1-164-159-11	CERAMIC	0.1uF		50V
C510	1-126-963-11	ELECT	4.7uF	20%	50V
C551	1-126-964-11	ELECT	10uF	20%	50V
C552	1-164-159-11	CERAMIC	0.1uF		50V
C553	1-164-159-11	CERAMIC	0.1uF		50V
C561	1-164-159-11	CERAMIC	0.1uF		50V
C562	1-162-306-11	CERAMIC	0.01uF	30%	16V
C902	1-126-935-11	ELECT	470uF	20%	10V
C903	1-126-964-11	ELECT	10uF	20%	50V
C904	1-126-936-11	ELECT	3300uF	20%	16V
C905	1-126-935-11	ELECT	470uF	20%	16V
C906	1-164-159-11	CERAMIC	0.1uF		50V
C907	1-126-934-11	ELECT	220uF	20%	10V
C909	1-126-968-11	ELECT	100uF	20%	50V
C910	1-126-964-11	ELECT	10uF	20%	50V
C915	1-126-948-11	ELECT	100uF	20%	35V
C916	1-162-306-11	CERAMIC	0.01uF	30%	16V
C918	1-126-935-11	ELECT	470uF	20%	10V
C919	1-164-159-11	CERAMIC	0.1uF		50V
C927	1-161-494-00	CERAMIC	0.022uF		25V
C928	1-161-494-00	CERAMIC	0.022uF		25V
C937	1-164-159-11	CERAMIC	0.1uF		50V
C941	1-126-964-11	ELECT	10uF	20%	50V
C942	1-126-935-11	ELECT	470uF	20%	6.3V
C943	1-164-159-11	CERAMIC	0.1uF		50V
C952	1-128-548-11	ELECT	4700uF	20%	25V
C953	1-164-159-11	CERAMIC	0.1uF		50V
C955	1-162-306-11	CERAMIC	0.01uF	30%	16V
C956	1-126-964-11	ELECT	10uF	20%	50V
C957	1-162-306-11	CERAMIC	0.01uF	30%	16V
C961	1-164-159-11	CERAMIC	0.1uF		50V
C962	1-126-964-11	ELECT	10uF	20%	50V
C964	1-164-159-11	CERAMIC	0.1uF		50V
C966	1-162-306-11	CERAMIC	0.01uF	30%	16V

MAIN

Ref. No.	Part No.	Description			Remark
C968	1-162-306-11	CERAMIC	0.01uF	30%	16V
C970	1-162-306-11	CERAMIC	0.01uF	30%	16V
C971	1-164-159-11	CERAMIC	0.1uF		50V
C972	1-164-159-11	CERAMIC	0.1uF		50V
C977	1-126-964-11	ELECT	10uF	20%	50V
C978	1-126-964-11	ELECT	10uF	20%	50V
C993	1-126-964-11	ELECT	10uF	20%	50V
C994	1-126-964-11	ELECT	10uF	20%	50V
		< CONNECTOR >			
CN501	1-506-469-11	PIN, CONNECTOR 4P			
CN502	1-784-780-11	CONNECTOR, FFC 19P			
* CN503	1-568-937-11	PIN, CONNECTOR 10P			
* CN505	1-569-624-11	SOCKET, CONNECTOR 17P (SYSTEM CONTROL 3)			
CN506	1-784-776-11	CONNECTOR, FFC 15P (AEP, UK)			
CN506	1-568-830-11	CONNECTOR, FFC 11P (EXCEPT AEP, UK)			
CN508	1-779-291-11	CONNECTOR, FFC (LIF (NON-ZIF)) 23P			
CN509	1-779-289-11	CONNECTOR, FFC (LIF (NON-ZIF)) 21P			
CN510	1-794-569-11	PIN, CONNECTOR 5P			
CN5031	1-794-569-11	PIN, CONNECTOR 5P			
CN5032	1-691-907-11	PIN, CONNECTOR 15P			
CN5041	1-580-176-11	PIN, CONNECTOR 10P			
* CN5042	1-568-419-11	PIN, CONNECTOR 9P			
		< DIODE >			
D551	8-719-911-19	DIODE	1SS199-25		
D552	8-719-911-19	DIODE	1SS199-25		
D901	8-719-500-56	DIODE	D3SBA20		
D902	8-719-024-99	DIODE	11ES2-NTA2B (AEP, UK)		
D903	8-719-024-99	DIODE	11ES2-NTA2B		
D904	8-719-024-99	DIODE	11ES2-NTA2B		
D911	8-719-024-99	DIODE	11ES2-NTA2B		
D912	8-719-110-72	DIODE	RDS30ESB2		
D913	8-719-109-89	DIODE	RDS5.6ESB2		
D920	8-719-024-99	DIODE	11ES2-NTA2B		
D921	8-719-911-19	DIODE	1SS199-25		
D922	8-719-024-99	DIODE	11ES2-NTA2B		
D923	8-719-024-99	DIODE	11ES2-NTA2B		
D924	8-719-050-84	DIODE	RB441Q-40T-77		
D941	8-719-911-19	DIODE	1SS199-25		
D942	8-719-911-19	DIODE	1SS199-25		
D943	8-719-911-19	DIODE	1SS199-25		
D944	8-719-911-19	DIODE	1SS199-25		
D945	8-719-911-19	DIODE	1SS199-25		
		< GROUND TERMINAL >			
EPT901	1-537-770-21	TERMINAL BOARD, GROUND			
EPT902	1-537-770-21	TERMINAL BOARD, GROUND			
		< IC >			
IC501	6-801-211-01	IC	M30622MGA-A77FP		
IC551	8-759-635-63	IC	M51943BSL		
IC901	8-759-158-62	IC	TA78057S		
IC903	8-759-473-41	IC	BA10T		
IC904	8-759-039-69	IC	uPC7805AHF		
IC951	8-749-923-05	IC	TORX178B (OPTICAL IN)		
IC952	8-749-923-05	IC	TORX178B (OPTICAL IN)		
IC953	8-759-684-00	IC	BA8274K		
IC991	8-759-701-79	IC	NJM7812FA		
		< COIL >			
L14	1-408-080-00	INDUCTOR	100uH		
L951	1-410-525-11	INDUCTOR	220uH		
L955	1-410-682-31	INDUCTOR	470uH		
		< TRANSISTOR >			
Q502	8-729-422-57	TRANSISTOR	UN4111		
Q503	8-729-422-57	TRANSISTOR	UN4111		
Q551	8-729-620-05	TRANSISTOR	2SC2603-EF		
Q901	8-729-140-97	TRANSISTOR	2SB734-34		
Q902	8-729-011-92	TRANSISTOR	2SC2001TP-K1K2		
		< RESISTOR >			
R44	1-247-807-31	CARBON	100	5%	1/4W
R92	1-247-807-31	CARBON	100	5%	1/4W
R501	1-247-807-31	CARBON	100	5%	1/4W
R502	1-247-807-31	CARBON	100	5%	1/4W
R503	1-247-807-31	CARBON	100	5%	1/4W
R504	1-247-807-31	CARBON	100	5%	1/4W
R505	1-247-807-31	CARBON	100	5%	1/4W
R506	1-247-807-31	CARBON	100	5%	1/4W
R507	1-247-807-31	CARBON	100	5%	1/4W
R508	1-249-429-11	CARBON	10K	5%	1/4W
R509	1-247-891-00	CARBON	330K	5%	1/4W
R510	1-249-411-11	CARBON	330	5%	1/4W
R511	1-249-429-11	CARBON	10K	5%	1/4W
R512	1-247-807-31	CARBON	100	5%	1/4W
R513	1-247-807-31	CARBON	100	5%	1/4W
R514	1-247-807-31	CARBON	100	5%	1/4W
R515	1-249-417-11	CARBON	1K	5%	1/4W
R516	1-247-807-31	CARBON	100	5%	1/4W
R517	1-247-807-31	CARBON	100	5%	1/4W
R518	1-247-807-31	CARBON	100	5%	1/4W
R519	1-249-429-11	CARBON	10K	5%	1/4W
R520	1-249-429-11	CARBON	10K	5%	1/4W
R521	1-247-807-31	CARBON	100	5%	1/4W
R522	1-249-429-11	CARBON	10K	5%	1/4W
R523	1-247-807-31	CARBON	100	5%	1/4W
R524	1-249-437-11	CARBON	47K	5%	1/4W
R525	1-247-807-31	CARBON	100	5%	1/4W
R526	1-247-807-31	CARBON	100	5%	1/4W
R527	1-247-807-31	CARBON	100	5%	1/4W
R528	1-247-807-31	CARBON	100	5%	1/4W
R529	1-247-807-31	CARBON	100	5%	1/4W
R530	1-247-807-31	CARBON	100	5%	1/4W
R531	1-247-807-31	CARBON	100	5%	1/4W
R532	1-249-437-11	CARBON	47K	5%	1/4W
R533	1-247-807-31	CARBON	100	5%	1/4W
R534	1-247-807-31	CARBON	100	5%	1/4W
R535	1-247-807-31	CARBON	100	5%	1/4W
R536	1-247-807-31	CARBON	100	5%	1/4W
R537	1-247-807-31	CARBON	100	5%	1/4W
R538	1-247-807-31	CARBON	100	5%	1/4W
R539	1-247-807-31	CARBON	100	5%	1/4W
R540	1-247-807-31	CARBON	100	5%	1/4W

MAIN **PANEL**

Ref. No.	Part No.	Description			Remark
R541	1-249-437-11	CARBON	47K	5%	1/4W
R542	1-249-437-11	CARBON	47K	5%	1/4W
R543	1-249-415-11	CARBON	680	5%	1/4W
R544	1-249-425-11	CARBON	4.7K	5%	1/4W
R545	1-249-417-11	CARBON	1K	5%	1/4W (E, MX)
R545	1-249-425-11	CARBON	4.7K	5%	1/4W (AUS, EA, KR, SP, TH)
R545	1-249-429-11	CARBON	10K	5%	1/4W (AEP, UK)
R546	1-249-407-11	CARBON	150	5%	1/4W (AUS, KR, SP, TH)
R546	1-249-417-11	CARBON	1K	5%	1/4W (EA)
R546	1-249-425-11	CARBON	4.7K	5%	1/4W (E, MX)
R548	1-249-425-11	CARBON	4.7K	5%	1/4W
R549	1-247-843-11	CARBON	3.3K	5%	1/4W
R550	1-249-441-11	CARBON	100K	5%	1/4W
R551	1-249-413-11	CARBON	470	5%	1/4W
R552	1-249-429-11	CARBON	10K	5%	1/4W
R553	1-249-437-11	CARBON	47K	5%	1/4W
R554	1-249-437-11	CARBON	47K	5%	1/4W
R555	1-249-425-11	CARBON	4.7K	5%	1/4W
R556	1-249-437-11	CARBON	47K	5%	1/4W
R557	1-249-433-11	CARBON	22K	5%	1/4W
R558	1-247-903-00	CARBON	1M	5%	1/4W
⚠R903	1-219-153-11	FUSIBLE	10	5%	1/4W F
R904	1-249-429-11	CARBON	10K	5%	1/4W
R905	1-247-807-31	CARBON	100	5%	1/4W
R906	1-247-807-31	CARBON	100	5%	1/4W
R908	1-249-417-11	CARBON	1K	5%	1/4W
R911	1-249-409-11	CARBON	220	5%	1/4W
R912	1-249-442-11	CARBON	510	5%	1/4W
R941	1-249-417-11	CARBON	1K	5%	1/4W
R942	1-249-417-11	CARBON	1K	5%	1/4W
R943	1-247-843-11	CARBON	3.3K	5%	1/4W
R951	1-249-413-11	CARBON	470	5%	1/4W
R952	1-249-413-11	CARBON	470	5%	1/4W
R956	1-247-807-31	CARBON	100	5%	1/4W
R957	1-247-807-31	CARBON	100	5%	1/4W
R958	1-247-807-31	CARBON	100	5%	1/4W
R959	1-247-807-31	CARBON	100	5%	1/4W
R961	1-249-421-11	CARBON	2.2K	5%	1/4W
R962	1-249-421-11	CARBON	2.2K	5%	1/4W
R963	1-249-426-11	CARBON	5.6K	5%	1/4W
R964	1-249-426-11	CARBON	5.6K	5%	1/4W
		< VIBRATOR >			
X501	1-567-098-41	VIBRATOR, CRYSTAL (32.768kHz)			
X502	1-781-107-21	VIBRATOR, SERAMIC (16MHz)			

****

	A-4727-699-A	PANEL BOARD, COMPLETE (AEP, UK)			
	A-4727-701-A	PANEL BOARD, COMPLETE (TH)			
	A-4727-702-A	PANEL BOARD, COMPLETE (AUS, EA, E, KR, MX, SP)			
		**********			
	4-232-328-01	HOLDER, FL TUBE			
	4-949-935-41	CUSHION (FL)			
		< CAPACITOR >			
C601	1-162-306-11	CERAMIC	0.01uF	30%	16V
C603	1-164-159-11	CERAMIC	0.1uF		50V
C605	1-162-306-11	CERAMIC	0.01uF	30%	16V
C606	1-124-261-00	ELECT	10uF	20%	50V
C607	1-126-382-11	ELECT	100uF	20%	6.3V
C608	1-164-159-11	CERAMIC	0.1uF		50V
C610	1-124-261-00	ELECT	10uF	20%	50V
C614	1-162-286-31	CERAMIC	220PF	10%	50V
C615	1-162-286-31	CERAMIC	220PF	10%	50V
C649	1-162-306-11	CERAMIC	0.01uF	30%	16V
C650	1-162-306-11	CERAMIC	0.01uF	30%	16V
C651	1-162-282-31	CERAMIC	100PF	10%	50V
C652	1-162-282-31	CERAMIC	100PF	10%	50V
C653	1-162-282-31	CERAMIC	100PF	10%	50V
C654	1-162-282-31	CERAMIC	100PF	10%	50V
C655	1-162-282-31	CERAMIC	100PF	10%	50V
C656	1-162-282-31	CERAMIC	100PF	10%	50V
C657	1-162-282-31	CERAMIC	100PF	10%	50V
C658	1-162-282-31	CERAMIC	100PF	10%	50V
C659	1-162-282-31	CERAMIC	100PF	10%	50V
C660	1-162-282-31	CERAMIC	100PF	10%	50V
C661	1-162-282-31	CERAMIC	100PF	10%	50V
C662	1-162-282-31	CERAMIC	100PF	10%	50V
C663	1-162-306-11	CERAMIC	0.01uF	30%	16V
C664	1-164-159-11	CERAMIC	0.1uF		50V
C665	1-119-943-91	ELECT	47uF	20%	50V
C666	1-119-943-91	ELECT	47uF	20%	50V
C667	1-164-159-11	CERAMIC	0.1uF		50V
C668	1-164-159-11	CERAMIC	0.1uF		50V
C669	1-164-159-11	CERAMIC	0.1uF		50V
		< CONNECTOR >			
CN602	1-784-741-11	CONNECTOR, FFC 19P			
		< DIODE >			
D601	8-719-911-19	DIODE 1SS199-25			
		< FLUORESCENT INDICATOR TUBE >			
FL601	1-518-744-11	INDICATOR TUBE, FLUORESCENT			
		< IC >			
IC601	6-800-722-01	IC MB90M407PF-G-109-BND			
		< RESISTOR >			
R601	1-249-429-11	CARBON	10K	5%	1/4W
R602	1-249-429-11	CARBON	10K	5%	1/4W
R603	1-249-429-11	CARBON	10K	5%	1/4W
R604	1-247-807-31	CARBON	100	5%	1/4W
R605	1-247-807-31	CARBON	100	5%	1/4W
R606	1-249-429-11	CARBON	10K	5%	1/4W
R607	1-249-429-11	CARBON	10K	5%	1/4W
R608	1-249-429-11	CARBON	10K	5%	1/4W
R616	1-249-441-11	CARBON	100K	5%	1/4W
R617	1-249-410-11	CARBON	270	5%	1/4W

The components identified by mark ⚠ or dotted line with mark ⚠ are critical for safety.
Replace only with part number specified.

PANEL SIRCS

Ref. No.	Part No.	Description			Remark
R618	1-249-413-11	CARBON	470	5%	1/4W
R619	1-249-414-11	CARBON	560	5%	1/4W
R620	1-249-416-11	CARBON	820	5%	1/4W
R621	1-249-417-11	CARBON	1K	5%	1/4W
R622	1-249-418-11	CARBON	1.2K	5%	1/4W
R623	1-249-419-11	CARBON	1.5K	5%	1/4W
R624	1-249-421-11	CARBON	2.2K	5%	1/4W
R625	1-249-422-11	CARBON	2.7K	5%	1/4W
R626	1-249-424-11	CARBON	3.9K	5%	1/4W
R627	1-249-426-11	CARBON	5.6K	5%	1/4W (AEP, UK)
R628	1-249-429-11	CARBON	10K	5%	1/4W
R629	1-249-417-11	CARBON	1K	5%	1/4W
R630	1-249-429-11	CARBON	10K	5%	1/4W
R631	1-249-417-11	CARBON	1K	5%	1/4W
R632	1-249-429-11	CARBON	10K	5%	1/4W
R633	1-249-417-11	CARBON	1K	5%	1/4W
R634	1-249-429-11	CARBON	10K	5%	1/4W
R635	1-249-417-11	CARBON	1K	5%	1/4W
R636	1-249-429-11	CARBON	10K	5%	1/4W
R637	1-249-417-11	CARBON	1K	5%	1/4W
R638	1-249-429-11	CARBON	10K	5%	1/4W
R639	1-249-417-11	CARBON	1K	5%	1/4W
R677	1-249-417-11	CARBON	1K	5%	1/4W
		< SWITCH >			
S601	1-771-410-21	SWITCH, TACTILE (DISPLAY)			
S602	1-771-410-21	SWITCH, TACTILE (CLOCK/TIMER)			
S603	1-771-410-21	SWITCH, TACTILE (TIME SELECT)			
S604	1-771-410-21	SWITCH, TACTILE (TUNER/BAND)			
S605	1-771-410-21	SWITCH, TACTILE (TUNING +)			
S606	1-771-410-21	SWITCH, TACTILE (TUNING –)			
S607	1-771-410-21	SWITCH, TACTILE (ENTER)			
S608	1-771-410-21	SWITCH, TACTILE (PRESET –)			
S609	1-771-410-21	SWITCH, TACTILE (PRESET +)			
S610	1-771-410-21	SWITCH, TACTILE (TUNER MEMORY)			
S611	1-771-410-21	SWITCH, TACTILE (STEREO/MONO)			
S612	1-771-410-21	SWITCH, TACTILE (PTY) (AEP, UK)			
		< VIBRATOR >			
X601	1-577-358-21	VIBRATOR, CERAMIC (4MHz)			

****

	1-680-697-11	SIRCS BOARD **********			
		< CAPACITOR >			
C101	1-124-589-11	ELECT	47uF	20%	16V
		< IC >			
IC101	8-749-011-05	IC GP1U28X (REMOTE CONTROL RECEIVER)			
		< RESISTOR >			
R101	1-249-401-11	CARBON	47	5%	1/4W
R102	1-249-401-11	CARBON	47	5%	1/4W

****

Ref. No.	Part No.	Description	Remark
		MISCELLANEOUS **********	
2	1-773-114-11	WIRE (FLAT TYPE) (19 CORE)	
54	1-757-599-11	WIRE (FLAT TYPE) (21 CORE)	
55	1-757-600-11	WIRE (FLAT TYPE) (23 CORE)	
56	1-757-629-11	CORD (WITH CONNECTOR) 5P	
57	1-757-631-11	CORD (WITH CONNECTOR) 20P	
58	1-757-630-11	CORD (WITH CONNECTOR) 19P	
60	1-769-940-11	WIRE (FLAT TYPE) (11 CORE)	(AUS, EA, E, KR, MX, SP, TH)
60	1-773-004-11	WIRE (FLAT TYPE) (15 CORE) (AEP, UK)	
61	1-693-529-11	TUNER (FM/AM) (AEP, UK)	
61	1-693-531-71	TUNER (FM/AM) (AUS, EA, E, MX, SP, TH)	
61	1-693-538-11	TUNER (FM/AM) (KR)	

MEMO

REVISION HISTORY

Clicking the version allows you to jump to the revised page.
Also, clicking the version at the upper right on the revised page allows you to jump to the next revised page.

Ver.	Date	Description of Revision
1.0	2001.09	New